EN

TECHNICAL MANUAL

WRE

Chillers and heat pumps

40 kW - 750 kW

ErP 2021 | Scroll compressor | R-410A | Cooling only | Heating/Cooling

PLUS

- » Electronic expansion valve
- » Up to 6 compressors
- » 1 or 2 cooling circuits
- » Remote connectivity with the most common protocols
- » Compact dimensions
- » 3 different acoustic configurations
- » High seasonal efficiency values

CE

RG66018068-04 06/22

EUROVENT CERTIFIED PERFORMANCE

Galletti AIR CONDITIONING

R410A

Dear Customer,
Thank you for placing your trust in one of the products of Galletti S.p.a
This product is the result of our work and our commitment to design, research, and production and has been made from the finest materials, employing state-of-the-art components and production technology.
The CE marking of the product ensures its compliance with the safety requirements of the following directives: the Machinery Directive, the Electromagnetic Compatibility Directive, the Electrical Safety Directive, and the Pressure Equipment Directive. Fulfillment of the Ecodesign requirements is fully in keeping with the environmental awareness that has always guided our company.
The company certification of the Quality and Safety management system ensures that product quality is constantly checked and improved, and that the product is manufactured in full compliance with the highest standards.
By choosing our product, you have opted for Quality, Reliability, Safety, and Sustainability.
At your disposal, once again.
Galletti S.p.a

TRANSLATION BY ORIGINAL INSTRUCTIONS

The water chillers and heat pumps comply with directive 2014/68//EC (PED).

The technical and dimensional data reported in this manual may be modified in view of any product improvement.

For any information , please contact the company: info@galletti.it

TABLE OF CONTENTS

1 SERIES

WRE series water chillers and water-cooled monobloc reversible heat pumps are designed for heating or cooling water for residential and commercial air-conditioning systems as well as industrial process applications.
The series consists of 27 models with cooling capacities ranging from 46 to 740 kW, available in cooling only or reversible heat pump versions.
The units are intended to be installed in technical compartments, in a position accessible to authorised personnel.

Do not install the unit in environments with gas or flammable dusts.

1.1 BEYOND CONVENTIONAL EFFICIENCY LIMITS

Combining the compressors using IDV technology with high-efficiency heat exchangers allows the WRE range to exceed the seasonal efficiency limits set by the ErP 2021 ecodesign directive.

2 CONSTRUCTIVE FEATURES

STRUCTURE

Galvanised steel sheet structure treated with a polyester powder coating suitable for indoor applications.
On request the unit can be supplied complete with easily removable containment panels to greatly simplify all maintenance and inspection operations.

COOLING CIRCUIT

— Scroll type compressors in a tandem or trio configuration that can be sound insulated. The adopted components' efficiency, reliability, and noise emission levels represent the state of the art for scroll compressors.
— Brazed plate heat exchangers made of stainless steel and optimised for use with R410A.
— Dehydrating filter.
— Flow indicator with humidity indicator.
— Electronic expansion valve with integrated sight glass.
— Cycle reversing valve (only WRE H)
— Check valve (WRE H)
— High and low pressure switch
— Schrader valves for checks and/or maintenance
— Refrigerant pressure gauges (optional)

On some models, depending on the type of compressor used, the following may be present:
— Relief valve for limiting the maximum pressure of the low pressure circuit.
— Relief valve for limiting the pressure of the high pressure circuit in compliance with UNI EN 378-2.

ELECTRONIC MICROPROCESSOR CONTROL

The electronic control enables the complete control of the **WRE** unit. It can be easily accessed through a polycarbonate flap with IP65 protection rating.
Main functions:
— Control of water returning from the system's temperature
— With modulating pump, control of the flow temperature to the unit or the Delta T
— Management of a signal to control a flow reverse valve on the equipment side. This makes it possible to reverse the water-side cycle for cooling-only versions, that is, to adjust the temperature at the evaporator or condenser inlet depending on the operating mode and to provide an external signal for reversing the system-side valves that connect the equipment to the unit's heat exchanger. For models with heat pump operation, this allows the water inlet and outlet to be reversed on an external hydraulic circuit breaker in order to improve stratification.
— Possibility of adapting the set-point to the outside load conditions or to the outside temperature
— Control of the electronic valve
— Complete alarm management, including history
— An RS485 serial port is available for monitoring
— Possibility of connecting a second remote terminal (display)
— On request, possibility of monitoring the COP in real time
— Management of multiple units connected to a LAN network

Devices controlled
— Compressor
— Reverse cycle valve (WRE H)
— Alarm signalling relay
— LAN networks for controlling 4 units in parallel and managing BACNET and LON communication protocols
— Management of the external pumping unit and, as an option, management of the splitting of the water flow both on the source side and on the equipment side.

3 CONFIGURATION OPTIONS

The WRE series consists of 27 models with different capacities, in cooling only version or reversible heat pump. All models operates with R410A refrigerant.

» Configuration options

1	**Power supply**
0	400 - 3 - 50 + N
1	400 - 3 - 50
2	400 - 3 - 50 + N + circuit breakers
3	400 - 3 - 50 + circuit breakers
2	**Control microprocessor and lamination device**
B	Advanced + electronic expansion valve
3	**Partial heat recovery**
0	Absent
D	Desuperheater (partial heat recovery)
4	**Management of source side pumps**
1	Single pump
2	Dual pump
3	Single pump + condensation control with 0-10V modulated output signal
4	Dual pump + condensation control with 0-10V modulated output signal
5	**User water flow modulation**
1	Single pump
2	Dual pump
3	Single pump + output signal with water flow modulation in ΔT logic = cost
4	Dual pump + output signal with water flow modulation in ΔT logic = cost
5	Single pump + output signal with water flow modulation in T logic = cost
6	Dual pump + output signal with water flow modulation in T logic = cost
6	**Remote communication**
0	Absent
1	RS485 serial card (Modbus or Carel protocol)
2	Lonworks serial card
4	Ethernet card (SNMP or BACNET protocol) + clock card
5	Ethernet card + clock card + monitoring software
7	**Anti vibration shock mounts**
0	Absent
G	Rubber vibration dampers at the base of the unit
M	Spring vibration dampers at the base of the unit
8	**Packing**
0	Standard
1	Wooden cage
2	Wooden crate
9	**Remote control**
0	Absent
1	Simplified remote control panel
3	Remote display for programmable microprocessor
10	**Anti-intrusion panelling**
0	Absent
P	Present (standard for Q version)

NOTE: The choice of some options can make the choice of some others forbidden or make some selection (fields) mandatory. Please contact Galletti S.p.A. for verification.

A	Power factor capacitors
B	Soft starter
C	Service kit (advanced controller required)
D	Signal for user side water flow reversal valve management
E	ON/OFF status of the compressors
F	Remote control for step capacity limit (advanced controller required)
G	Configurable digital alarm board (advanced controller required)
H	Refrigerant pressure gauges
I	Two pairs of Victaulic joints
L	Filter regulating kit
M	Set point compensation outdoor temperature probe
N	Compressor tandem/trio isolation valves
P	Unit lifting pipes
Q	Temperature probe for pump shutdown on the primary circuit
V	Set-point modification with 4-20mA signal

4 TECHNICAL FEATURES

4.1 RATED TECHNICAL DATA OF WRE C WATER CHILLERS

WRE			052	062	072	082	092	122	132
Power supply		V-ph-Hz	400 - 3N - 50						
Cooling capacity	(1)(E)	kW	47,1	59,0	68,5	80,5	92,6	119	135
Total power input	(1)(E)	kW	11,0	13,8	16,1	18,8	21,7	27,7	31,4
EER	(1)(E)		4,26	4,26	4,26	4,28	4,27	4,31	4,31
SEER	(2)(E)		5,48	5,71	5,75	5,53	5,84	5,55	5,53
Water flow user side	(1)	l/h	8112	10158	11807	13864	15946	20510	23312
Water pressure drop user side	(1)(E)	kPa	50	50	48	49	49	47	47
Water flow source side	(1)	l/h	9873	12364	14382	16884	19432	24979	28414
Water pressure drop source side	(1)(E)	kPa	77	77	73	74	75	70	71
Maximum current absorption		A	29,0	36,0	42,0	49,0	57,0	72,0	81,0
Start up current		A	112	161	211	218	178	288	296
Startup current with soft starter		A	67	97	127	131	107	173	178
Compressors / circuits			2 / 1						
Sound power level	(3)(E)	dB(A)	73	75	76	77	80	80	82
Sound power level, low-noise version	(3)	dB(A)	67	69	70	71	74	74	76
Sound power level quiet version	(3)	dB(A)	61	63	64	65	68	68	70
Transport / operating weight		kg	310	328	343	361	408	560	619

WRE			152	154	182	184	212	214	242
Power supply		V-ph-Hz	400 - 3N - 50						
Cooling capacity	(1)(E)	kW	156	149	182	185	215	214	240
Total power input	(1)(E)	kW	36,2	35,0	41,0	42,6	48,4	48,9	53,3
EER	(1)(E)		4,32	4,24	4,43	4,34	4,44	4,37	4,51
SEER	(2)(E)		5,80	5,30	5,83	6,31	5,60	5,95	5,53
Water flow user side	(1)	l/h	26893	25552	31238	31791	36973	36795	41332
Water pressure drop user side	(1)(E)	kPa	48	35	39	38	41	41	37
Water flow source side	(1)	l/h	32772	31290	37948	38779	44903	44808	50098
Water pressure drop source side	(1)(E)	kPa	74	52	60	58	63	63	57
Maximum current absorption		A	91,0	90,0	112	114	130	128	151
Start up current		A	356	224	380	293	399	307	420
Startup current with soft starter		A	214	153	228	199	239	210	252
Compressors / circuits			2 / 1	4 / 2	2 / 1	4 / 2	2 / 1	4 / 2	2 / 1
Sound power level	(3)(E)	dB(A)	87	79	87	83	89	83	89
Sound power level, low-noise version	(3)	dB(A)	81	73	83	77	84	77	85
Sound power level quiet version	(3)	dB(A)	75	67	77	71	78	71	79
Transport / operating weight		kg	688	997	727	932	799	973	869

(1) Water temperature - user side 12°C / 7°C, water temperature - dissipation side 30°C / 35°C (EN14511:2018)
(2) η efficiency values for heating and cooling are respectively calculated by the following formulas: [η = SCOP / 2,5 - F(1) - F(2)] e [η = SEER / 2,5 - F(1) - F(2)]. For further information, please refer to the technical document "ErP 2009/125/EC DIRECTIVE" in the catalogue introducing pages, or to the EN14825:2017 regulation.
(3) Sound power level measured according to ISO 9614
(E) EUROVENT certified data

WRE			244	274	302	314	364	384	454
Power supply		V-ph-Hz	400 - 3N - 50						
Cooling capacity	(1)(E)	kW	238	271	299	314	362	388	457
Total power input	(1)(E)	kW	54,7	62,3	66,8	71,4	82,1	88,0	93,7
EER	(1)(E)		4,35	4,35	4,48	4,40	4,41	4,40	4,88
SEER	(2)(E)		5,96	5,91	5,55	6,22	6,19	5,92	6,50
Water flow user side	(1)	l/h	40957	46553	51448	54021	62227	66617	78600
Water pressure drop user side	(1)(E)	kPa	44	46	44	46	47	47	30
Water flow source side	(1)	l/h	49913	56753	62410	65722	75682	81052	94179
Water pressure drop source side	(1)(E)	kPa	65	68	67	71	71	71	50
Maximum current absorption		A	144	161	166	182	224	240	261
Start up current		A	360	377	510	447	492	508	529
Startup current with soft starter		A	244	259	306	305	340	353	369
Compressors / circuits			4 / 2	4 / 2	2 / 1	4 / 2	4 / 2	4 / 2	4 / 2
Sound power level	(3)(E)	dB(A)	83	85	91	90	90	90	92
Sound power level, low-noise version	(3)	dB(A)	77	79	88	84	86	86	87
Sound power level quiet version	(3)	dB(A)	71	73	82	78	80	80	81
Transport / operating weight		kg	992	1101	1101	1393	1491	1523	1925

WRE			504	564	606	636	696	746
Power supply		V-ph-Hz	400 - 3N - 50					
Cooling capacity	(1)(E)	kW	511	565	596	643	696	747
Total power input	(1)(E)	kW	104	118	127	138	148	157
EER	(1)(E)		4,91	4,80	4,69	4,65	4,70	4,74
SEER	(2)(E)		6,56	6,52	6,56	6,51	6,53	6,57
Water flow user side	(1)	l/h	87730	97009	102425	110456	119608	128288
Water pressure drop user side	(1)(E)	kPa	36	43	43	47	46	47
Water flow source side	(1)	l/h	104947	116367	123329	133152	143938	154171
Water pressure drop source side	(1)(E)	kPa	60	70	71	76	75	75
Maximum current absorption		A	303	317	328	370	412	454
Start up current		A	571	661	593	638	680	722
Startup current with soft starter		A	403	460	421	457	491	524
Compressors / circuits			4 / 2	4 / 2	6 / 2	6 / 2	6 / 2	6 / 2
Sound power level	(3)(E)	dB(A)	92	93	94	94	94	94
Sound power level, low-noise version	(3)	dB(A)	88	90	88	89	89	90
Sound power level quiet version	(3)	dB(A)	82	84	82	83	83	84
Transport / operating weight		kg	1968	2035	2592	2689	2648	2752

(1) Water temperature - user side 12°C / 7°C, water temperature - dissipation side 30°C / 35°C (EN14511:2018)
(2) η efficiency values for heating and cooling are respectively calculated by the following formulas: [η = SCOP / 2,5 - F(1) - F(2)] e [η = SEER / 2,5 - F(1) - F(2)]. For further information, please refer to the technical document "ErP 2009/125/EC DIRECTIVE" in the catalogue introducing pages, or to the EN14825:2017 regulation.
(3) Sound power level measured according to ISO 9614
(E) EUROVENT certified data

4.2 RATED TECHNICAL DATA OF WRE H HEAT PUMPS

WRE			052	062	072	082	092	122	132
Power supply		V-ph-Hz	400 - 3N - 50						
Cooling capacity	(1)	kW	47,1	58,9	68,5	80,5	92,6	119	135
Total power input	(1)	kW	11,1	13,8	16,1	18,9	21,7	27,7	31,4
EER	(1)		4,25	4,26	4,26	4,27	4,26	4,30	4,31
SEER	(2)		5,48	5,71	5,75	5,53	5,84	5,55	5,53
Water flow user side	(1)	l/h	8122	10147	11798	13874	15946	20512	23307
Water pressure drop user side	(1)	kPa	50	50	48	49	49	47	47
Water flow source side	(1)	l/h	9889	12353	14371	16899	19436	24984	28407
Water pressure drop source side	(1)	kPa	77	77	73	74	75	70	71
Heating capacity	(3)	kW	53,1	66,4	77,5	91,0	105	137	157
Total power input	(3)	kW	14,1	17,5	20,3	23,6	27,3	34,9	39,7
COP	(3)		3,76	3,80	3,82	3,86	3,83	3,94	3,94
SCOP	(2)		5,01	5,08	5,11	5,05	5,17	5,06	5,09
Heating energy efficiency class	(4)		A+++						
Water flow user side	(3)	l/h	9186	11487	13414	15752	18136	23816	27138
Water pressure drop user side	(3)	kPa	68	68	64	65	66	65	65
Water flow source side	(3)	l/h	11584	14517	16962	19943	22903	30323	34543
Water pressure drop source side	(3)	kPa	95	96	93	94	94	96	96
Maximum current absorption		A	29,0	36,0	42,0	49,0	57,0	72,0	81,0
Start up current		A	112	161	211	218	178	288	296
Startup current with soft starter		A	67	97	127	131	107	173	178
Compressors / circuits			2 / 1						
Sound power level	(5)	dB(A)	73	75	76	77	80	80	82
Sound power level, low-noise version	(5)	dB(A)	67	69	70	71	74	74	76
Sound power level quiet version	(5)	dB(A)	61	63	64	65	68	68	70
Refrigerant charge - circuit 1	(6)	kg	5,0	5,0	6,3	6,3	8,0	9,7	13,0
Refrigerant charge - circuit 2	(7)	kg	-						
Transport / operating weight		kg	315	334	353	371	418	572	635
Height		mm	975	975	975	975	975	1900	1900
Length		mm	1640	1640	1640	1640	1640	1640	1640
Depth		mm	948	948	948	948	948	948	948

(1) Water temperature - user side 12°C / 7°C, water temperature - dissipation side 30°C / 35°C (EN14511:2018)
(2) η efficiency values for heating and cooling are respectively calculated by the following formulas: [η = SCOP / 2,5 - F(1) - F(2)] e [η = SEER / 2,5 - F(1) - F(2)]. For further information, please refer to the technical document "ErP 2009/125/EC DIRECTIVE" in the catalogue introducing pages, or to the EN14825:2017 regulation.
(3) Water temperature - user side 40°C / 45°C, water temperature - source side 10°C / 7°C (EN14511:2018)
(4) Seasonal energy efficiency class for LOW TEMPERATURE room heating under AVERAGE climatic conditions [EUROPEAN REGULATION No 811/2013]
(5) Sound power level measured according to ISO 9614
(6) If the two cooling circuits are unbalanced, it is the smaller circuit. Kg gas value is estimated. For the exact value refer to the plate data on the unit.
(7) If the two cooling circuits are unbalanced, it is the larger circuit. Kg gas value is estimated. For the exact value refer to the plate data on the unit.

WRE			152	154	182	184	212	214	242
Power supply		V-ph-Hz	400 - 3N - 50						
Cooling capacity	(1)	kW	156	148	182	185	215	214	240
Total power input	(1)	kW	36,2	35,0	41,0	42,6	48,4	48,9	53,3
EER	(1)		4,31	4,24	4,43	4,34	4,44	4,38	4,51
SEER	(2)		5,80	5,30	5,83	6,31	5,60	5,95	5,53
Water flow user side	(1)	l/h	26895	25545	31235	31789	36961	36787	41326
Water pressure drop user side	(1)	kPa	48	35	39	38	41	41	37
Water flow source side	(1)	l/h	32778	37944	44893	50089	62402	31283	38775
Water pressure drop source side	(1)	kPa	74	60	63	57	67	52	58
Heating capacity	(3)	kW	176	174	201	211	243	244	269
Total power input	(3)	kW	45,4	44,0	53,3	53,5	60,8	61,6	66,9
COP	(3)		3,88	3,96	3,77	3,94	4,00	3,96	4,02
SCOP	(2)		5,18	4,92	5,18	5,56	5,14	5,44	5,06
Heating energy efficiency class	(4)		A+++						
Water flow user side	(3)	l/h	30579	30190	34885	36631	42241	42305	46681
Water pressure drop user side	(3)	kPa	65	49	52	52	57	57	50
Water flow source side	(3)	l/h	38688	38317	43571	46423	53818	53713	59452
Water pressure drop source side	(3)	kPa	93	73	72	75	81	81	72
Maximum current absorption		A	91,0	90,0	112	114	130	128	151
Start up current		A	356	224	380	293	399	307	420
Startup current with soft starter		A	214	153	228	199	239	210	252
Compressors / circuits			2 / 1	4 / 2	2 / 1	4 / 2	2 / 1	4 / 2	2 / 1
Sound power level	(5)	dB(A)	87	79	87	83	87	83	89
Sound power level, low-noise version	(5)	dB(A)	81	73	83	77	84	77	85
Sound power level quiet version	(5)	dB(A)	75	67	77	71	78	71	79
Refrigerant charge - circuit 1	(6)	kg	13,0	8,7	17,5	9,0	19,2	11,0	21,0
Refrigerant charge - circuit 2	(7)	kg	-	8,7	-	9,0	-	11,0	-
Transport / operating weight		kg	706	1014	746	948	820	991	893
Height		mm	1900	1900	1900	1900	1900	1900	1900
Length		mm	1640	2140	1640	2140	1640	2140	1640
Depth		mm	948	948	948	948	948	948	948

(1) Water temperature - user side 12°C / 7°C, water temperature - dissipation side 30°C / 35°C (EN14511:2018)
(2) η efficiency values for heating and cooling are respectively calculated by the following formulas: [η = SCOP / 2,5 - F(1) - F(2)] e [η = SEER / 2,5 - F(1) - F(2)]. For further information, please refer to the technical document "ErP 2009/125/EC DIRECTIVE" in the catalogue introducing pages, or to the EN14825:2017 regulation.
(3) Water temperature - user side 40°C / 45°C, water temperature - source side 10°C / 7°C (EN14511:2018)
(4) Seasonal energy efficiency class for LOW TEMPERATURE room heating under AVERAGE climatic conditions [EUROPEAN REGULATION No 811/2013]
(5) Sound power level measured according to ISO 9614
(6) If the two cooling circuits are unbalanced, it is the smaller circuit. Kg gas value is estimated. For the exact value refer to the plate data on the unit.
(7) If the two cooling circuits are unbalanced, it is the larger circuit. Kg gas value is estimated. For the exact value refer to the plate data on the unit.

WRE			244	274	302	314	364	384	454
Power supply		V-ph-Hz	400 - 3N - 50						
Cooling capacity	(1)	kW	238	271	299	314	362	388	457
Total power input	(1)	kW	54,7	62,3	66,8	71,4	82,1	88,0	93,7
EER	(1)		4,35	4,35	4,48	4,40	4,41	4,40	4,88
SEER	(2)		5,96	5,91	5,55	6,22	6,19	5,92	6,50
Water flow user side	(1)	l/h	40958	46550	51446	54007	62223	66618	78595
Water pressure drop user side	(1)	kPa	44	46	44	46	47	47	30
Water flow source side	(1)	l/h	44790	49915	56749	65705	75683	81057	94186
Water pressure drop source side	(1)	kPa	63	65	68	71	71	71	50
Heating capacity	(3)	kW	271	310	338	359	412	439	509
Total power input	(3)	kW	68,8	78,4	83,6	90,3	103	109	117
COP	(3)		3,95	3,95	4,05	3,97	3,99	4,01	4,36
SCOP	(2)		5,41	5,42	5,09	5,55	5,50	5,39	5,95
Heating energy efficiency class	(4)		A+++						
Water flow user side	(3)	l/h	47109	53836	58708	62288	71491	76255	88389
Water pressure drop user side	(3)	kPa	59	62	60	64	64	63	45
Water flow source side	(3)	l/h	59784	68402	75069	79238	91067	97284	115004
Water pressure drop source side	(3)	kPa	87	91	88	91	92	92	59
Maximum current absorption		A	144	161	166	182	224	240	261
Start up current		A	360	377	510	447	492	508	529
Startup current with soft starter		A	244	259	306	305	340	353	369
Compressors / circuits			4 / 2	4 / 2	2 / 1	4 / 2	4 / 2	4 / 2	4 / 2
Sound power level	(5)	dB(A)	83	85	91	90	90	90	92
Sound power level, low-noise version	(5)	dB(A)	77	79	88	84	86	86	87
Sound power level quiet version	(5)	dB(A)	71	73	82	78	80	80	81
Refrigerant charge - circuit 1	(6)	kg	10,7	12,8	26,0	16,9	16,7	18,0	31,3
Refrigerant charge - circuit 2	(7)	kg	10,7	12,8	-	16,9	16,7	18,0	31,3
Transport / operating weight		kg	1012	1121	1141	1425	1523	1555	1959
Height		mm	1900	1900	1900	1900	1900	1900	1900
Length		mm	2140	2140	2140	2930	2930	2930	2930
Depth		mm	948	948	948	948	948	948	948

(1) Water temperature - user side 12°C / 7°C, water temperature - dissipation side 30°C / 35°C (EN14511:2018)
(2) η efficiency values for heating and cooling are respectively calculated by the following formulas: [η = SCOP / 2,5 - F(1) - F(2)] e [η = SEER / 2,5 - F(1) - F(2)]. For further information, please refer to the technical document "ErP 2009/125/EC DIRECTIVE" in the catalogue introducing pages, or to the EN14825:2017 regulation.
(3) Water temperature - user side 40°C / 45°C, water temperature - source side 10°C / 7°C (EN14511:2018)
(4) Seasonal energy efficiency class for LOW TEMPERATURE room heating under AVERAGE climatic conditions [EUROPEAN REGULATION No 811/2013]
(5) Sound power level measured according to ISO 9614
(6) If the two cooling circuits are unbalanced, it is the smaller circuit. Kg gas value is estimated. For the exact value refer to the plate data on the unit.
(7) If the two cooling circuits are unbalanced, it is the larger circuit. Kg gas value is estimated. For the exact value refer to the plate data on the unit.

WRE			504	564	606	636	696	746
Power supply		V-ph-Hz	400 - 3N - 50					
Cooling capacity	(1)	kW	510	565	596	643	696	747
Total power input	(1)	kW	104	118	127	138	148	157
EER	(1)		4,91	4,80	4,69	4,65	4,70	4,74
SEER	(2)		6,56	6,52	6,56	6,51	6,53	6,57
Water flow user side	(1)	l/h	87721	97016	102424	110464	119601	128286
Water pressure drop user side	(1)	kPa	35	43	43	47	46	47
Water flow source side	(1)	l/h	104931	116374	123327	133169	143929	154171
Water pressure drop source side	(1)	kPa	60	70	71	76	75	75
Heating capacity	(3)	kW	566	630	665	719	775	833
Total power input	(3)	kW	130	148	158	172	185	197
COP	(3)		4,34	4,27	4,20	4,18	4,20	4,24
SCOP	(2)		5,92	5,88	5,97	5,85	5,86	5,88
Heating energy efficiency class	(4)		A+++					
Water flow user side	(3)	l/h	98259	109416	115479	124926	134660	144717
Water pressure drop user side	(3)	kPa	53	63	63	67	66	67
Water flow source side	(3)	l/h	127862	141965	149123	161213	174027	187468
Water pressure drop source side	(3)	kPa	70	86	85	92	91	93
Maximum current absorption		A	303	317	328	370	412	454
Start up current		A	571	661	593	638	680	722
Startup current with soft starter		A	403	460	421	457	491	524
Compressors / circuits			4 / 2	4 / 2	6 / 2	6 / 2	6 / 2	6 / 2
Sound power level	(5)	dB(A)	92	93	94	94	94	94
Sound power level, low-noise version	(5)	dB(A)	88	90	88	89	89	90
Sound power level quiet version	(5)	dB(A)	82	84	82	83	83	84
Refrigerant charge - circuit 1	(6)	kg	31,1	31,3	35,0	34,8	37,7	37,6
Refrigerant charge - circuit 2	(7)	kg	31,1	31,3	35,0	34,8	37,7	37,6
Transport / operating weight		kg	2008	2075	2669	2775	2734	2838
Height		mm	1900	1900	2300	2300	2300	2300
Length		mm	2930	2930	3330	3330	3330	3330
Depth		mm	948	948	1168	1168	1168	1168

(1) Water temperature - user side 12°C / 7°C, water temperature - dissipation side 30°C / 35°C (EN14511:2018)
(2) η efficiency values for heating and cooling are respectively calculated by the following formulas: [η = SCOP / 2,5 - F(1) - F(2)] e [η = SEER / 2,5 - F(1) - F(2)]. For further information, please refer to the technical document "ErP 2009/125/EC DIRECTIVE" in the catalogue introducing pages, or to the EN14825:2017 regulation.
(3) Water temperature - user side 40°C / 45°C, water temperature - source side 10°C / 7°C (EN14511:2018)
(4) Seasonal energy efficiency class for LOW TEMPERATURE room heating under AVERAGE climatic conditions [EUROPEAN REGULATION No 811/2013]
(5) Sound power level measured according to ISO 9614
(6) If the two cooling circuits are unbalanced, it is the smaller circuit. Kg gas value is estimated. For the exact value refer to the plate data on the unit.
(7) If the two cooling circuits are unbalanced, it is the larger circuit. Kg gas value is estimated. For the exact value refer to the plate data on the unit.

5 PED CATEGORY

The water chillers and heat pumps comply with directive 2014/68//EC (PED).

Series	Size	Notified body	PED Category	Marking
WRE	F1	0476	II	CE + PED
	F2	0476	II	CE + PED
	F3	0476	II	CE + PED
	F4	0476	II	CE + PED
	F5	0476	II	CE + PED

6 PERFORMANCES

Galletti has developed on its www.galletti.com web-area the new ON-LINE integrated platform for product selection, configuration and the making of the economic offer.
The software, whose use is easy and intuitive, allows the identification of the desired products by calculating their performances based on real working conditions and their configuration helping the user in choosing options and accessories. It also allows to obtain a detailed report which includes performances, dimensional drawings, tender specifications and the economic offer.

Product selection:
Filters to make the identification of the requested product easier
Performance calculation and saving of results
Performance comparison between products belonging to different series

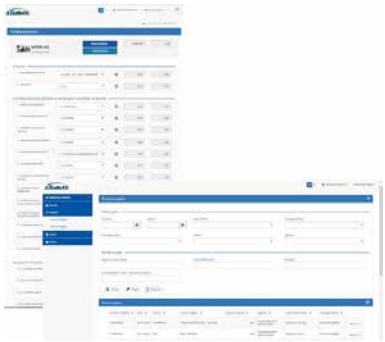

Configuration and project history
Wizard configuration of accessories and options for chillers, heat pumps and hydronic units
Creation of a project which collects all products of interest
Complete management of the storaged history projects

Report:
Generation of a detailed list report in pdf format
Choice of the sections to be included in the print:
— Products performances
— Dimensional drawings
— Tender specifications

7 CALCULATION FACTORS

7.1 WATER AND GLYCOL MIXTURE

Based on the minimum outlet water temperature, you can derive the percentage of ethylene glycol and the corrective coefficient using the table below.

Percentage of ethylene glycol (%)	0%	10%	20%	30%	40%
Minimum temperature of water produced (°C)	5	2	-5	-10	-15
Mixture freezing temperature (°C)	0	-4	-14	-18	-24
Capacity correction factor	1	1,00	0,99	0,99	0,98
Water flow rate correction factor	1	1,05	1,09	1,14	1,20
Pressure drop correction factor	1	1,16	1,35	1,58	1,86

⚠ **WARNING** Always make sure that the external pumping unit is capable of withstanding the required percentage of glycol. If propylene glycol is used, please contact the manufacturer for more information.

8 SOUND LEVELS

Mod.	50 Hz (1)	63 Hz (1)	80 Hz (1)	100 Hz (1)	125 Hz (1)	160 Hz (1)	200 Hz (1)	250 Hz (1)	315 Hz (1)	400 Hz (1)	500 Hz (1)	630 Hz (1)	800 Hz (1)
	dB	dB	dB	dB	dB	dB	dB	dB	dB	dB	dB	dB	dB
WRE052CS	63,0	44,0	38	61	41,0	54	62	52,0	68	67	66,0	61	64
WRE062CS	65,0	46,0	40	63	43,0	56	64	54,0	70	69	68,0	63	66
WRE072CS	66,0	47,0	41	64	44,0	57	65	55,0	71	70	69,0	64	67
WRE082CS	67,0	48,0	42	65	45,0	58	66	56,0	72	71	70,0	65	68
WRE092CS	70,0	51,0	45	68	48,0	61	69	59,0	75	74	73,0	68	71
WRE122CS	70,0	51,0	45	68	48,0	61	69	59,0	75	74	73,0	68	71
WRE132CS	72,0	53,0	47	70	50,0	63	71	61,0	77	76	75,0	70	73
WRE152CS	77,0	58,0	52	75	55,0	68	76	66,0	82	81	80,0	75	78
WRE154CS	69,0	50,0	44	67	47,0	60	68	58,0	74	73	72,0	67	70
WRE182CS	77,0	58,0	52	75	55,0	68	76	66,0	82	81	80,0	75	78
WRE184CS	73,0	54,0	48	71	51,0	64	72	62,0	78	77	76,0	71	74
WRE212CS	77,0	58,0	52	75	55,0	68	76	66,0	82	81	80,0	75	78
WRE214CS	73,0	54,0	48	71	51,0	64	72	62,0	78	77	76,0	71	74
WRE242CS	79,0	60,0	54	77	57,0	70	78	68,0	84	83	82,0	77	80
WRE244CS	73,0	54,0	48	71	51,0	64	72	62,0	78	77	76,0	71	74
WRE274CS	75,0	56,0	50	73	53,0	66	74	64,0	80	79	78,0	73	76
WRE302CS	81,0	62,0	56	79	59,0	72	80	70,0	86	85	84,0	79	82
WRE314CS	80,0	61,0	55	78	58,0	71	79	69,0	85	84	83,0	78	81
WRE364CS	80,0	61,0	55	78	58,0	71	79	69,0	85	84	83,0	78	81
WRE384CS	80,0	61,0	55	78	58,0	71	79	69,0	85	84	83,0	78	81
WRE454CS	82,0	63,0	57	80	60,0	73	81	71,0	87	86	85,0	80	83
WRE504CS	82,0	63,0	57	80	60,0	73	81	71,0	87	86	85,0	80	83
WRE564CS	83,0	64,0	58	81	61,0	74	82	72,0	88	87	86,0	81	84
WRE606CS	84,0	65,0	59	82	62,0	75	83	73,0	89	88	87,0	82	85
WRE636CS	84,0	65,0	59	82	62,0	75	83	73,0	89	88	87,0	82	85
WRE696CS	84,0	65,0	59	82	62,0	75	83	73,0	89	88	87,0	82	85
WRE746CS	84,0	65,0	59	82	62,0	75	83	73,0	89	88	87,0	82	85

1. Sound power level by octave band, not weighted

Mod.	1000 Hz (1)	1250 Hz (1)	1600 Hz (1)	2000 Hz (1)	2500 Hz (1)	3150 Hz (1)	4000 Hz (1)	5000 Hz (1)	6300 Hz (1)	LwA (2)
	dB	dB	dB	dB	dB	dB	dB	dB	dB	dB(A)
WRE052CS	61,0	55	64	59,0	55	53	50,0	49	45	73
WRE062CS	63,0	57	66	61,0	57	55	52,0	51	47	75
WRE072CS	64,0	58	67	62,0	58	56	53,0	52	48	76
WRE082CS	65,0	59	68	63,0	59	57	54,0	53	49	77
WRE092CS	68,0	62	71	66,0	62	60	57,0	56	52	80
WRE122CS	68,0	62	71	66,0	62	60	57,0	56	52	80
WRE132CS	70,0	64	73	68,0	64	62	59,0	58	54	82
WRE152CS	75,0	69	78	73,0	69	67	64,0	63	59	87
WRE154CS	67,0	61	78	65,0	69	59	56,0	55	51	79
WRE182CS	75,0	69	78	73,0	69	67	64,0	63	59	87
WRE184CS	71,0	65	80	69,0	71	63	60,0	59	55	83
WRE212CS	75,0	69	70	73,0	61	67	64,0	63	59	87
WRE214CS	71,0	65	74	69,0	65	63	60,0	59	55	83
WRE242CS	77,0	71	74	75,0	65	69	66,0	65	61	89
WRE244CS	71,0	65	74	69,0	65	63	60,0	59	55	83
WRE274CS	73,0	67	76	71,0	67	65	62,0	61	57	85
WRE302CS	79,0	73	82	77,0	73	71	68,0	67	63	91
WRE314CS	78,0	72	81	76,0	72	70	67,0	66	62	90
WRE364CS	78,0	72	81	76,0	72	70	67,0	66	62	90
WRE384CS	78,0	72	81	76,0	72	70	67,0	66	62	90
WRE454CS	80,0	74	83	78,0	74	72	69,0	68	64	92
WRE504CS	80,0	74	83	78,0	74	72	69,0	68	64	92
WRE564CS	81,0	75	84	79,0	75	73	70,0	69	65	93
WRE606CS	82,0	76	85	80,0	76	74	71,0	70	66	94
WRE636CS	82,0	76	85	80,0	76	74	71,0	70	66	94
WRE696CS	82,0	76	85	80,0	76	74	71,0	70	66	94
WRE746CS	82,0	76	85	80,0	76	74	71,0	70	66	94

1. Sound power level by octave band, not weighted
2. Total sound power level, weighted A

8.1 ACOUSTIC INSULATION OPTIONS

OPTION	ΔLw dB
Low-noise version (L): Compressor silencing housings	-6,0
Super low-noise version (Q): Compressor silencing housings + soundproofing panels	-12,0

9 OPERATING LIMITS

The following graphs illustrate the continuous operating limits of the WRE units in relation to the outlet water temperature of the unit and the water inlet temperature of the source. The following limits are to be considered valid for water temperature fluctuations of 5 K.

WARNING: contact the support area if you wish to operate with water temperature fluctuations other than 5 K at full load.

WARNING: except for special requests, which can be managed to order, the WRE series units set the number of compressors running according to the temperature of the water entering the unit (temperature returning from the system) and not according to the outlet temperature. Therefore, the settable set point always refers to the temperature of the water entering the unit. The outlet temperature, to which the following graphs refer, therefore depends on the set point set on the return line, on the design thermal differential, and on any unit splitting conditions. Under splitting conditions, a reduction in the number of compressors running results in a simultaneous reduction in the water thermal differential. Always contact the support area if you feel it is necessary to operate near the limits of the operating range even under unit splitting conditions.

WARNING: the units are designed to operate with water and air temperatures falling within the range defined by the operating limits. Attempting to operate the units beyond these limits may cause irreparable damage to the units themselves.

9.1 OPERATING LIMITS FOR WRE C

» WRE C operating range

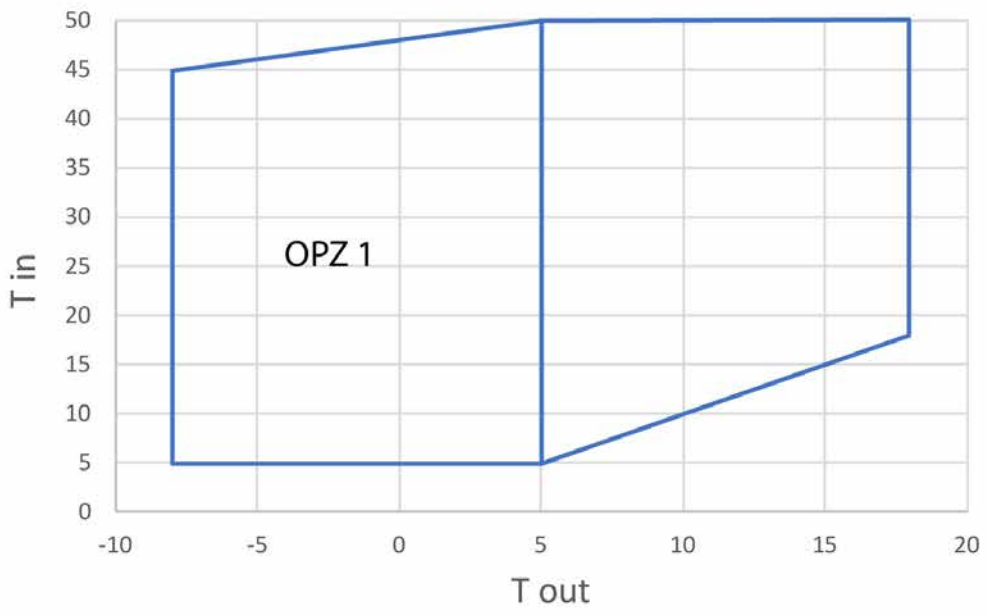

OPT 1	Glycol
T out	Outlet water temperature (equipment)
T in	Inlet water temperature (source)

9.2 OPERATING LIMITS FOR WRE H

» WRE H operating range - cooling mode

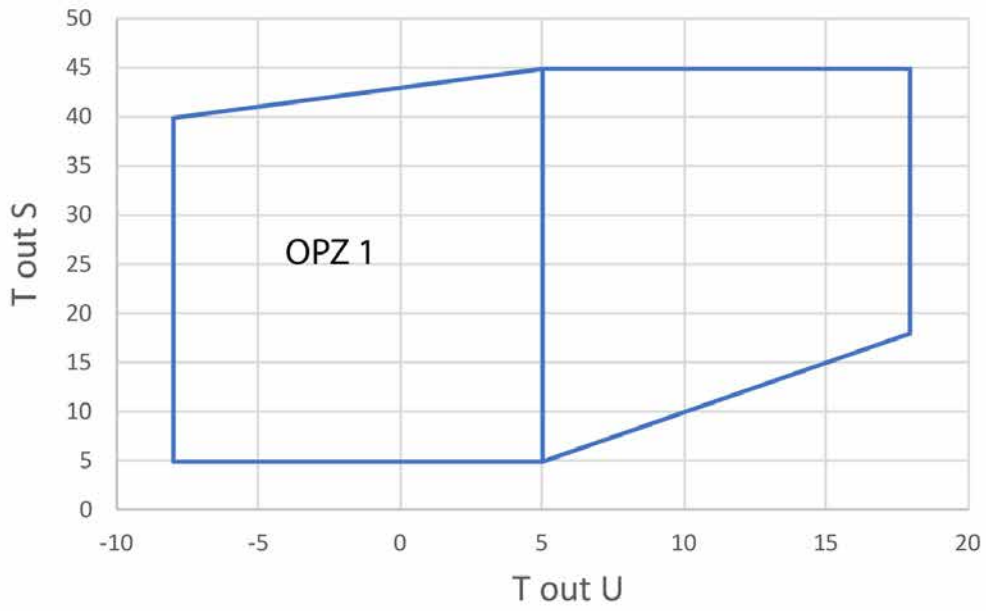

OPT 1	Glycol
T out U	Outlet water temperature (user)
T out S	Outlet water temperature (source)

» WRE H operating range - heating mode

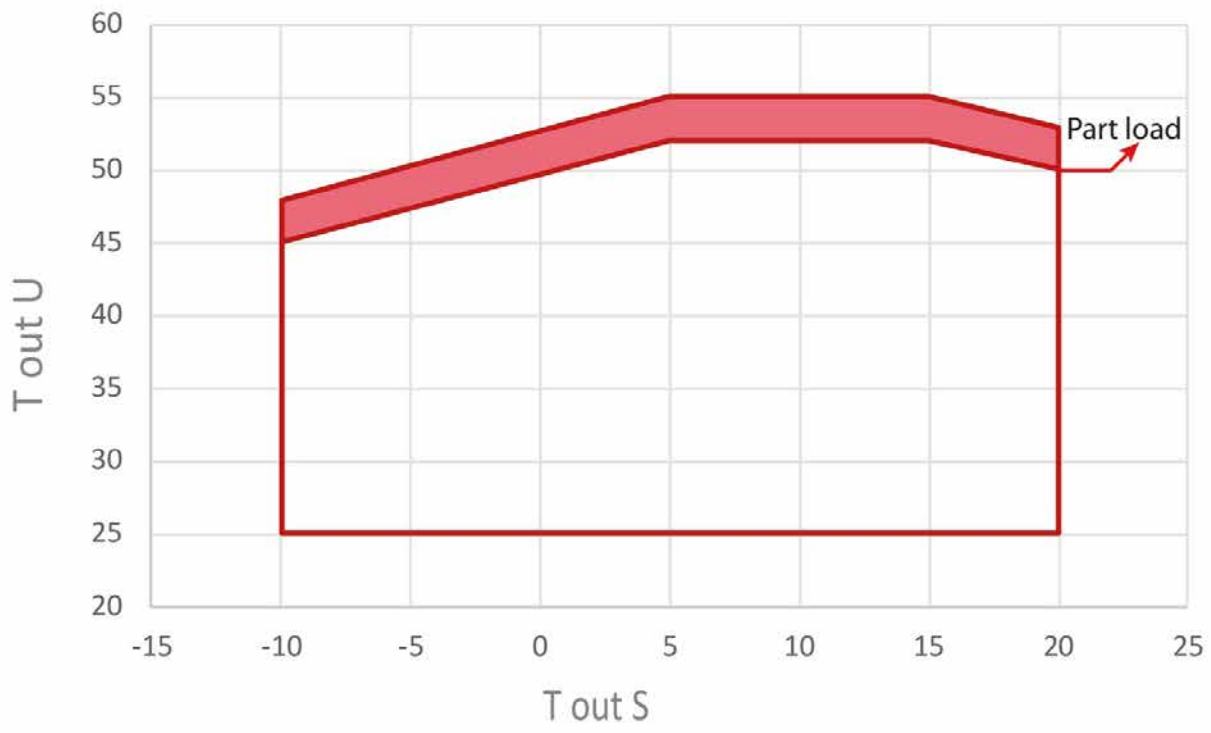

T out U Outlet water temperature (user)
T out S Outlet water temperature (source)
Part load in this area of the envelope the unit can enter the prevent mode, with temporary disconnection of a compressor in order to prevent high-pressure alarms as much as possible, thereby keeping the unit operating uninterruptedly.

9.3 THERMAL CARRYING FLUID

The heat exchangers belonging to the WRE series can operate with mixtures of water and up to 35% ethylene glycol. Contact the manufacturer in case you want to use propylene glycol.

WARNING: always follow the instructions given in the Installation, use, and maintenance manual with regard to the heat transfer fluid.

10 WATER PRESSURE DROP

10.1 Y FILTER PRESSURE DROPS

The table below shows the pressure drops of the Y filter (Δp) as a function of the water flow rate (Qw), assuming an average water temperature of 10 °C,

	F1	F2	F3	F4	F5
Water connections	2″	3″	3″	4″	5″
Filter	F21NOR50	F21NOR80F	F21NOR80F	F21NOR100F	F21N125
Conncections	Threaded	Threaded	Threaded	Threaded	Flanged
Material	Brass	Brass	Brass	Brass	Cast Iron
DN	50	80	80	100	125
Kvs	35	83	83	100	567
Filtering capacity [µm]	500	800	800	800	1000
Weight [kg]	1,1	3,2	3,2	6,9	35

» Y Filter pressure drops Frame 1,2,3

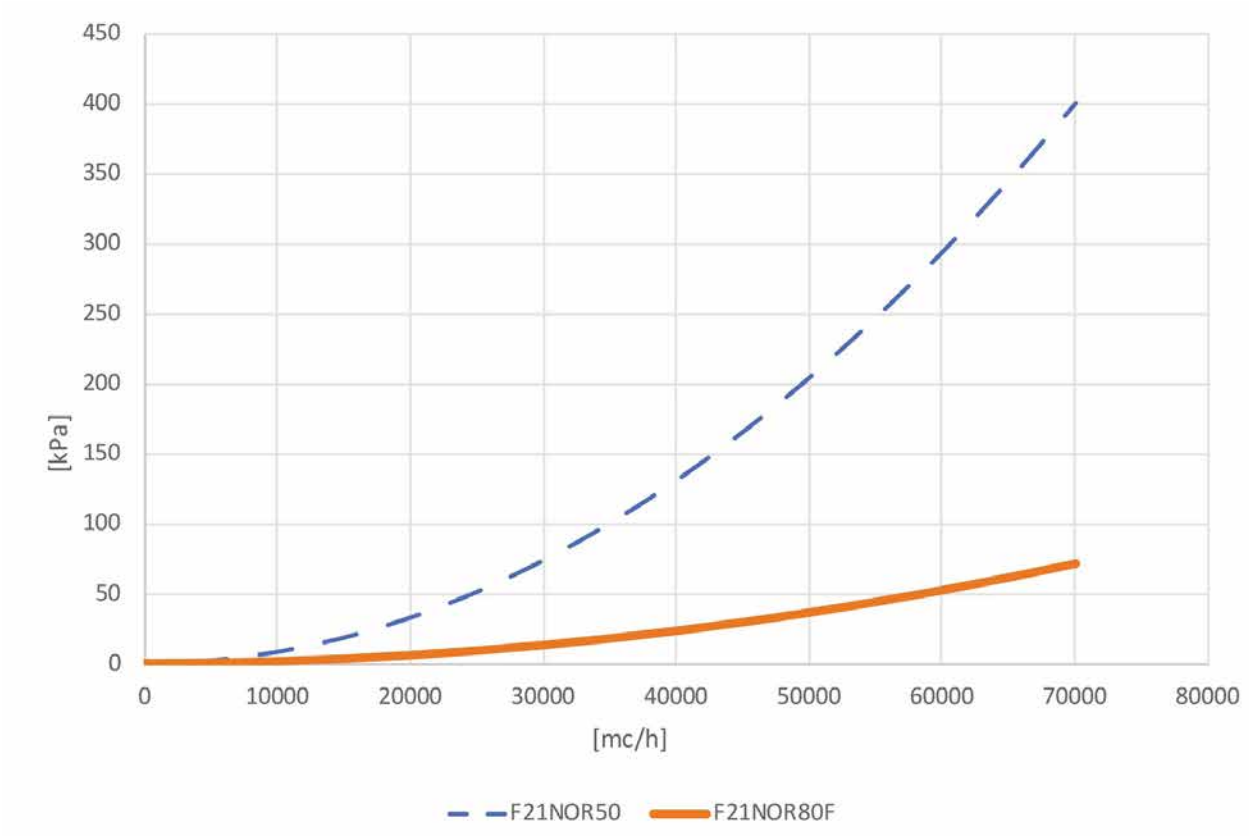

kPa: Water pressure drop
mc/h: Flow

» Y Filter pressure drops Frame 4,5

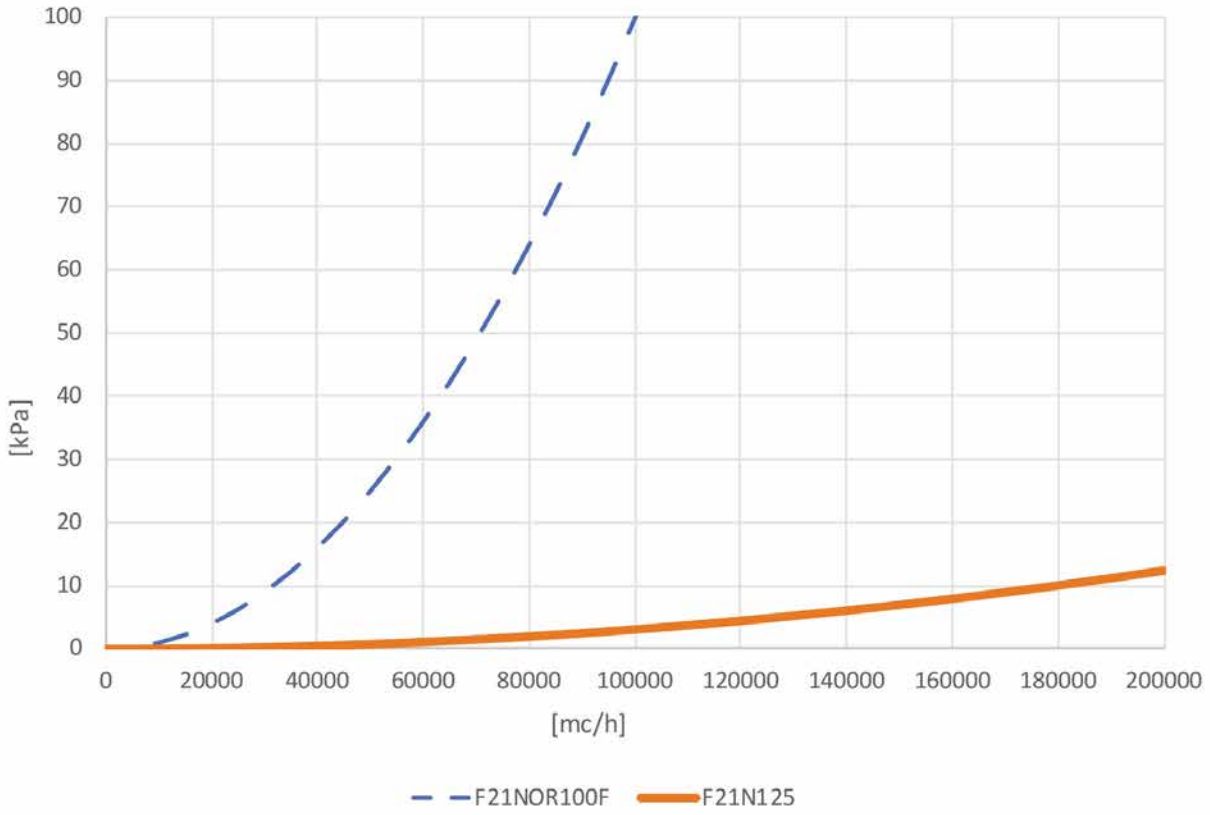

kPa: Water pressure drop
mc/h: Flow

11 WATER CIRCUIT

When setting up the water circuit of the unit, it is advisable to follow the directions below and in any case comply with local or national regulations.
Connect the pipes to the chiller using flexible couplings to prevent the transmission of vibrations and to compensate thermal expansions.
Install the following components on the piping:

— Temperature and pressure indicators for routine maintenance and monitoring of the unit. Pressure control on the water side allows to assess the correct functioning of the expansion tank and to detect water leakage in advance.
— Traps on incoming and outgoing pipes for temperature measurements, which can provide a direct reading of the operating temperatures.
— Regulating valves (gate valves) for isolating the unit from the water circuit.
— **Metal mesh filter (supplied), with a mesh size no greater than 1 mm, to be fitted on the inlet pipe to protect the exchanger from scale or impurities present in the pipes.**
— Air vent valves, to be placed at the highest points of the water circuit for the purpose of bleeding air. (The internal pipes of the unit are fitted with small air vent valves for bleeding the unit itself: this operation may only be carried out when the unit is disconnected from the power supply).
— Drainage valve and, where necessary, a drainage tank for emptying out the equipment for maintenance purposes or when the unit is taken out of service at the end of the season. (A 1" drainage valve is provided on the optional water buffer tank: this operation may only be carried out when the unit is disconnected from the power supply).

It is of fundamental importance that the incoming water supply is hooked up to the connection marked "Water Inlet".
Otherwise the evaporator would be exposed to the risk of freezing since the antifreeze thermostat would not be able to perform its function; moreover the reverse cycle would not be respected in the cooling mode, resulting in additional risks of malfunctioning.
The dimensions and position of plumbing connections are shown in the dimension tables at the end of the manual.

The water circuit must be set up in such a way as to guarantee that the nominal flow rate of the water supplied to the evaporator remains constant (+/- 15%) in all operating conditions.
A standard feature of WRE units is a device for controlling the flow rate (flow switch) in the water circuit in the immediate vicinity of the evaporator.

11.1 WATER CONTENT AND CHARGING OF EXPANZION TANK SYSTEM

The expansion tank is pre-charged to a pressure of 1.5 bars, sufficient for systems with a maximum height difference (H in the figure at the side) of 13 metres.
For greater height differences, refer to the table below in order to adjust the charging pressure of the expansion tank accordingly.
In no case should you exceed the maximum height difference Hmax = 35 m.

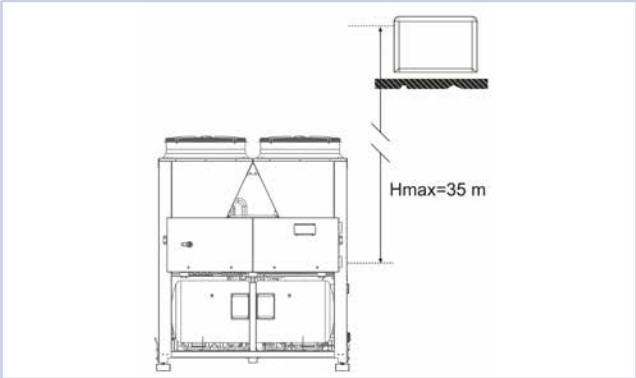

Height difference of system (m)	Charging pressure of expansion tank
< 13	1,50
15	1,70
20	2,20
25	2,70
30	3,10

11.2 WATER CIRCUIT

» WRE (evaporator)

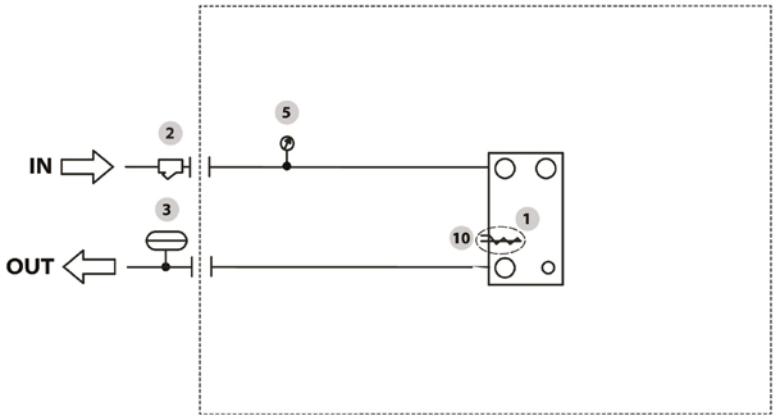

LEGEND

1 Evaporator
2 Water filter (included)
3 Flow switch
4 -
5 Pressure gauge
6 -
7 -
8 -
9 -
10 Antifreeze electric heating
------ Internal and external borderline
——— OPTIONAL

11.3 DE-SUPERHEATER

11.3.1 Recommended water circuit

The partial heat recovery option is provided by a braze-welded plate heat exchanger placed in series on the compressor delivery (typically in series in relation to the finned pack condenser). Its size is designed to limit pressure drops on the refrigerant side to a minimum.
All units equipped with a heat recovery kit have modulating condensation control as a standard feature. To prevent unbalances from occurring in the cooling circuit in the event of start-ups with very low water temperatures at the recuperator inlet (<35°C), the recovery system water circuit should be configured as shown in the following figure. A low recuperator inlet water temperature would cause low condensation temperatures and thus an insufficient pressure differential on the expansion valve with the consequent risk of tripping the safety devices.

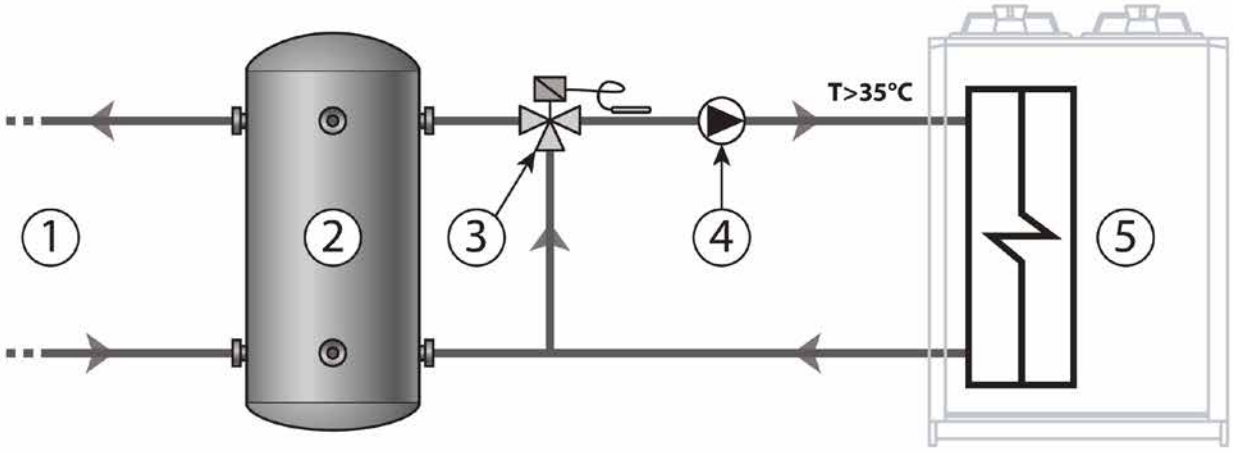

1 Utility side
2 Buffer tank
3 Mixing valve
4 Circulation pump
5 On-board desuperheater

The bulb of the 3-way mixer valve is placed at the de-superheater exchanger inlet. By mixing the hot water produced by the recovery with colder water from the tank, it reduces the time needed for the system to reach full operating capacity to a few moments.
A buffer tank must be placed between the unit and the utility

since the demand for hot water and its availability are not simultaneous, because it needs the compressors to be running.
Note that the heat recovery capacity is tied to the delivered cooling capacity and therefore decreases proportionately in partial load situations: this aspect should be taken into account when choosing the size of the storage tank.
The partial heat recovery option is supplied only with the de-superheater exchanger. The other components of the circuit laid out in the previous figure are not included in the supply.

11.3.2 Water pressure drop

WRE	52	62	72	82	92	122	132	152	182	212	242	302
no. of cooling circuits	1	1	1	1	1	1	1	1	1	1	1	1
no. of desuperheaters	1	1	1	1	1	1	1	1	1	1	1	1
De-superheater type	CBH110	CBH110	CBH110	CBH110	CBH110	CBH110	CBH110	CBH110	CBH110	CBH110	CBH110	CBH110

WRE	154	184	214	244	274	314	364	384	454	504	564	606	636	696	746
no. of cooling circuits	2	2	2	2	2	2	2	2	2	2	2	2	2	2	2
no. of desuperheaters	2	2	2	2	2	2	2	2	2	2	2	2	2	2	2
De-superheater type	CBH110	CBH110	CBH110	CBH110	CBH110	CBH110	CBH110	CBH110	CBH110	CBH110	CBH110	CBH110	CBH110	CBH110	CBH110

» Single-circuit pressure drops

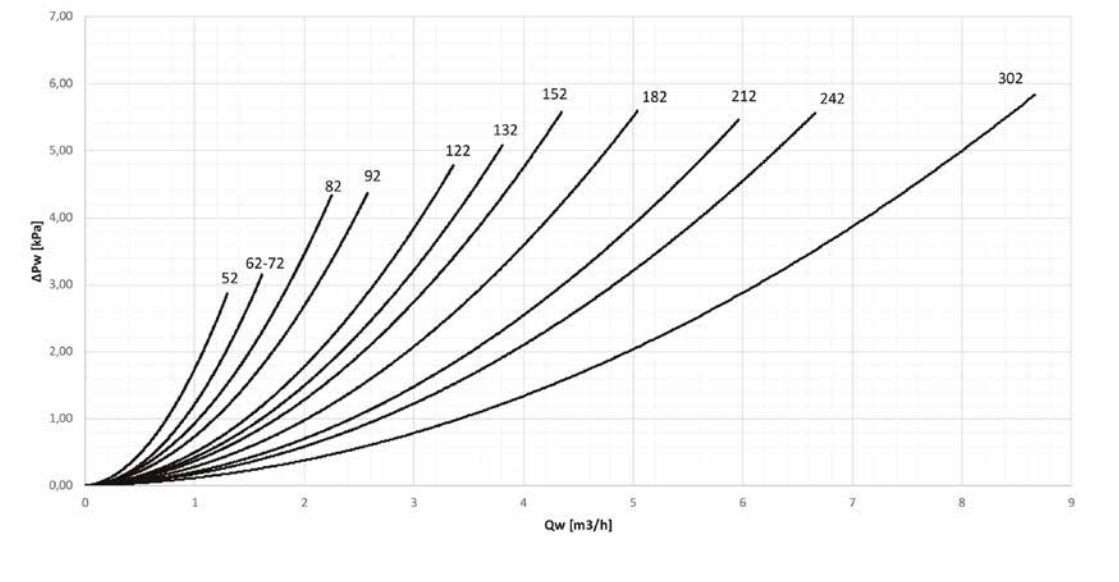

» Dual-circuit pressure drops

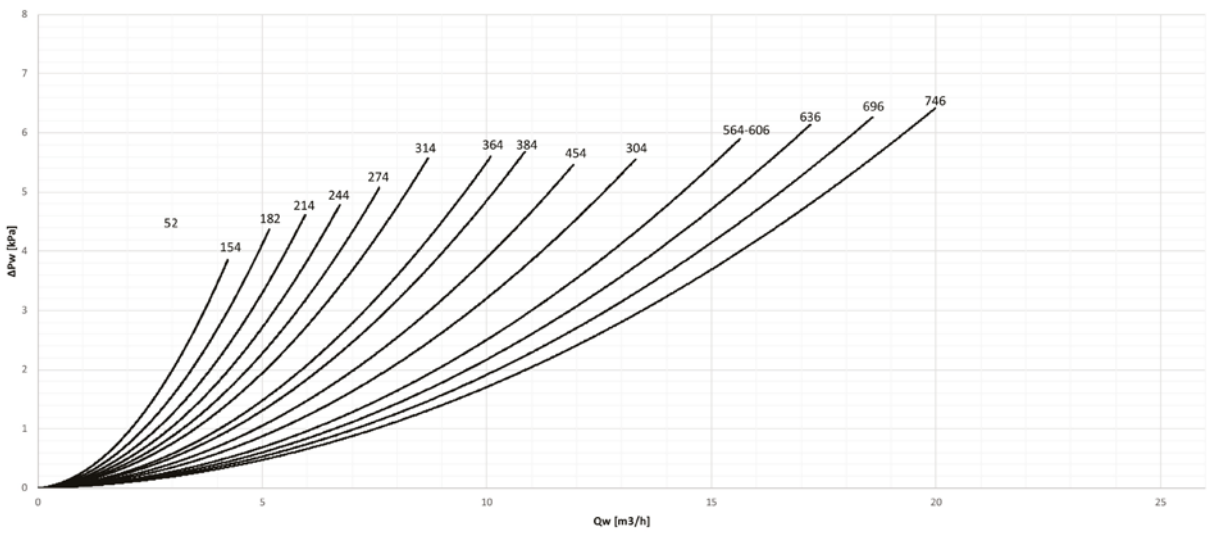

11.3.3 Heating capacities

» De-Superheather heating capacities

WRE			052	062	072	082	092	122	132	152	154	182	184	212	214
Water temperature - source side 12 / 7 °C															
De-superheater heating capacity circuit 1	(1)	kW	8	10	11	13	15	20	22	25	29	35	39	12	15
De-superheater heating capacity circuit 2	(1)	kW	-	-	-	-	-	-	-	-	-	-	-	12	15
De-superheater water flow for ciruit		l/h	358	454	530	626	717	932	1056	1204	1395	1653	1844	588	717

(1) De-superheater water temperature 40/ 45 °C, sourse side water temperature 12 / 7°C

WRE			242	244	274	302	314	364	384	454	504	564	606	636	696	746
Water temperature - source side 12 / 7 °C																
De-superheater heating capacity circuit 1	(1)	kW	17	20	22	51	25	29	31	35	39	45	46	50	54	58
De-superheater heating capacity circuit 2	(1)	kW	17	20	22	-	25	29	31	35	39	45	46	50	54	58
De-superheater water flow for ciruit		l/h	827	932	1056	2418	1204	1395	1500	1653	1844	2164	2188	2384	2575	2771

(1) De-superheater water temperature 40/ 45 °C, sourse side water temperature 12 / 7°C

☞ **NOTE:** During heating mode with desuperheater switched on, desuperheater capacity must be subtracted to heating capacity of the unit

11.3.4 Heating capacities corrective factors

» De-Superheather heating capacities corrective factors

	Inlet water T / outlet water T °C		
	45/50	50/55	55/60
corr.f. Pdes	0,63	0,62	0,60
corr.f. Δp (water side)	0,41	0,40	0,37
corr.f. Water flow	0,63	0,62	0,60

12 INSTALLATION CLEARANCE REQUIREMENTS

During handling it is compulsory to check dimensions, weights, centre of gravity and anchorages. Check as well that lifting and positioning devices conform to the current safety regulations. The unit leaves the factory screwed onto a wooden pallet, which allows it to be easily conveyed with a forklift truck. After removing the unit from the pallet, handle it gently, without applying excessive pressure on the side panels. You should collect and separate the packing materials (wood, cardboard, nylon etc.) and make them available for recycling in order to minimise their environmental impact. Before lifting, remove the screws fastening the base of the unit to the wood platform.
While the unit is being unloaded and positioned, utmost care must be taken to avoid abrupt or violent manoeuvres. Be very careful when transporting it inside rooms. Do not use the unit components as anchors.
The unit should be lifted using Ø 1½" GAS steel pipes at least 3mm thick inserted through the holes provided on the base side members and identified by means of appropriate stickers. The pipes, which must project at least 300 mm on every side, will be slung with ropes of equal length and secured to the lifting hook (apply stops at the end of the pipes to prevent the weight from causing the rope to slip off the pipe).
Use ropes or belts whose length exceeds the machine height and place spacer boards and bars on the top of the unit to avoid damaging the sides and upper part of the unit itself.
In this phase, before the definitive position, vibration damping supports can be installed (optional).

⚠ **WARNING:** in all lifting operations make sure that the unit is securely anchored in order to prevent accidental falls or overturning.

⚠ **USE** all available lifting points.

13 SITING AND DAMPERS

It is important to bear in mind the following aspects when choosing the best site for installing the unit:
— Size and origin of water pipes;
— Location of the power supply;
— Solidity of the supporting surface;
— Avoid the possible reverberation of sound waves; do not install the unit in narrow or cramped spaces;
— Ensure adequate accessibility for maintenance or repairs (see section on p. 25).

This appliance is not intended to be used by children or persons with physical, sensorial or mental problems, inexpert or unprepared, without supervision. Be careful that children do not approach the appliance.
When installing the vibration dampers follow the instructions below:
— Screw the jack (6) into the vibration damper with jack support plate (1) all the way;
— Screw the bolt (5) until the jack (6) is locked in place on the vibration damper (1);
— Screw the bolt (3) and insert one of the two disks (2) into the jack (6);
— Insert the jack (6) into the hole on the unit base;
— Adjust the height by turning the bolt (3);
— Insert the second disk (2) into the jack (6) until it makes contact with the base;
— Tighten the vibration damper with the split washer (4) and the bolt (5) to the unit base.

WRE	DAMPERS
F1	4
F2	4
F3	4
F4	4
F5	4

» Dampers components

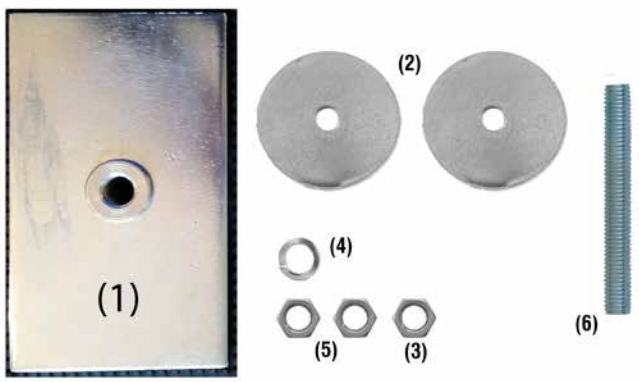

14 DIMENSIONS

» WRE 52 - 92

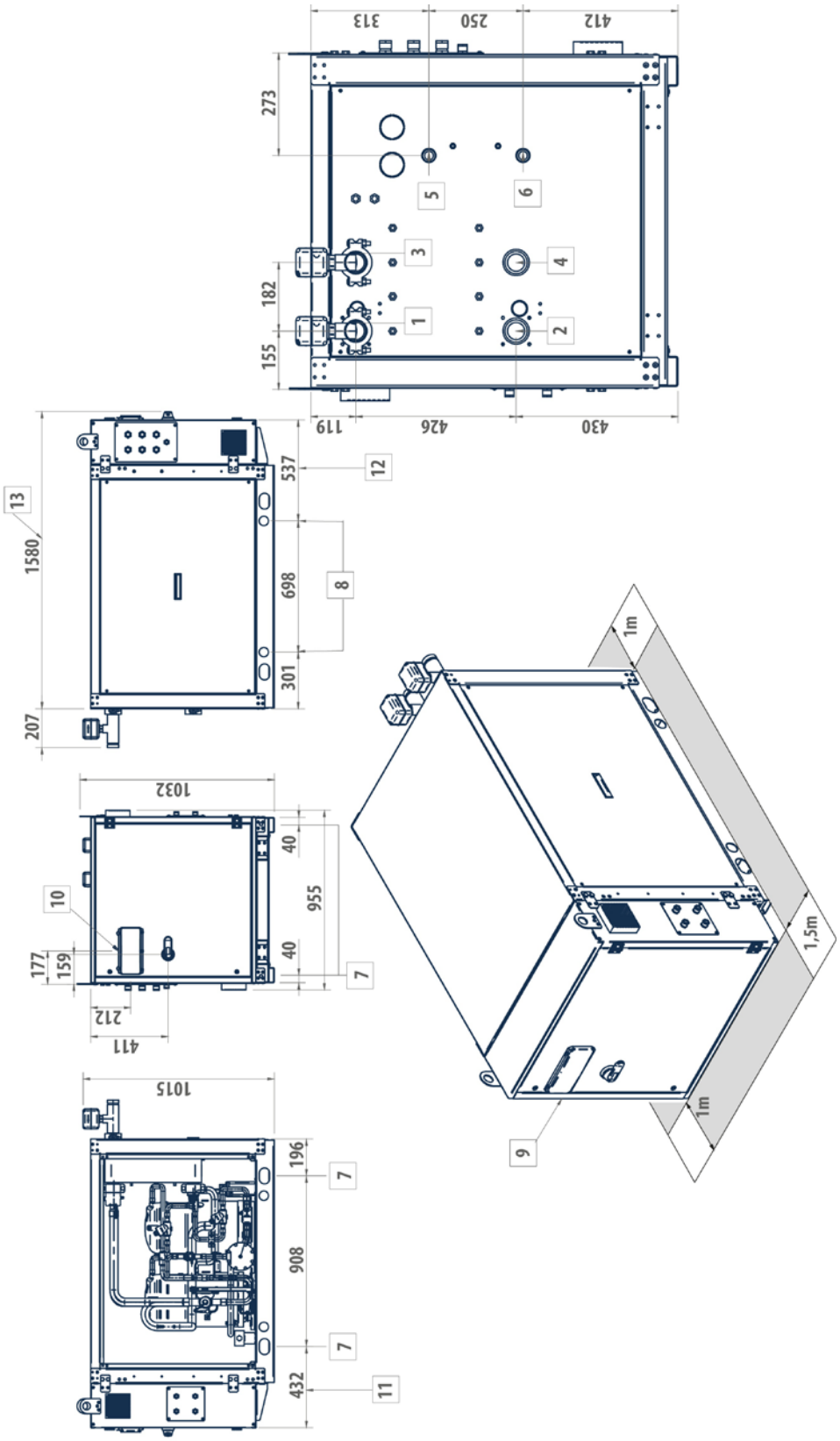

Legend WRE C

1 Dissipation side - outlet (Victaulic 2")
2 Dissipation side - inlet Victaulic (Victaulic 2")
3 User side - inlet (Victaulic 2")
4 User side - outlet (Victaulic 2")
5 Desuperheater water inlet 1"
6 De-superheater water outlet 1"
7 Vibration dumpers
8 Lifting points
9 Power supply input
10 User interface
11 Outdoor installation 463 mm
12 Outdoor installation 568 mm
13 Outdoor installation 1611 mm

Chiller Flow Swith Position: 2-3

Legend WRE H

1 Dissipation side - inlet Victaulic (Victaulic 2")
2 Dissipation side - outlet (Victaulic 2")
3 User side - inlet (Victaulic 2")
4 User side - outlet (Victaulic 2")
5 Desuperheater water inlet 1"
6 De-superheater water outlet 1"
7 Vibration dumpers
8 Lifting points
9 Power supply input
10 User interface
11 Outdoor installation 463 mm
12 Outdoor installation 568 mm
13 Outdoor installation 1611 mm

Heat Pump Flow Swith Position: 1-3

Closing panelling available on request

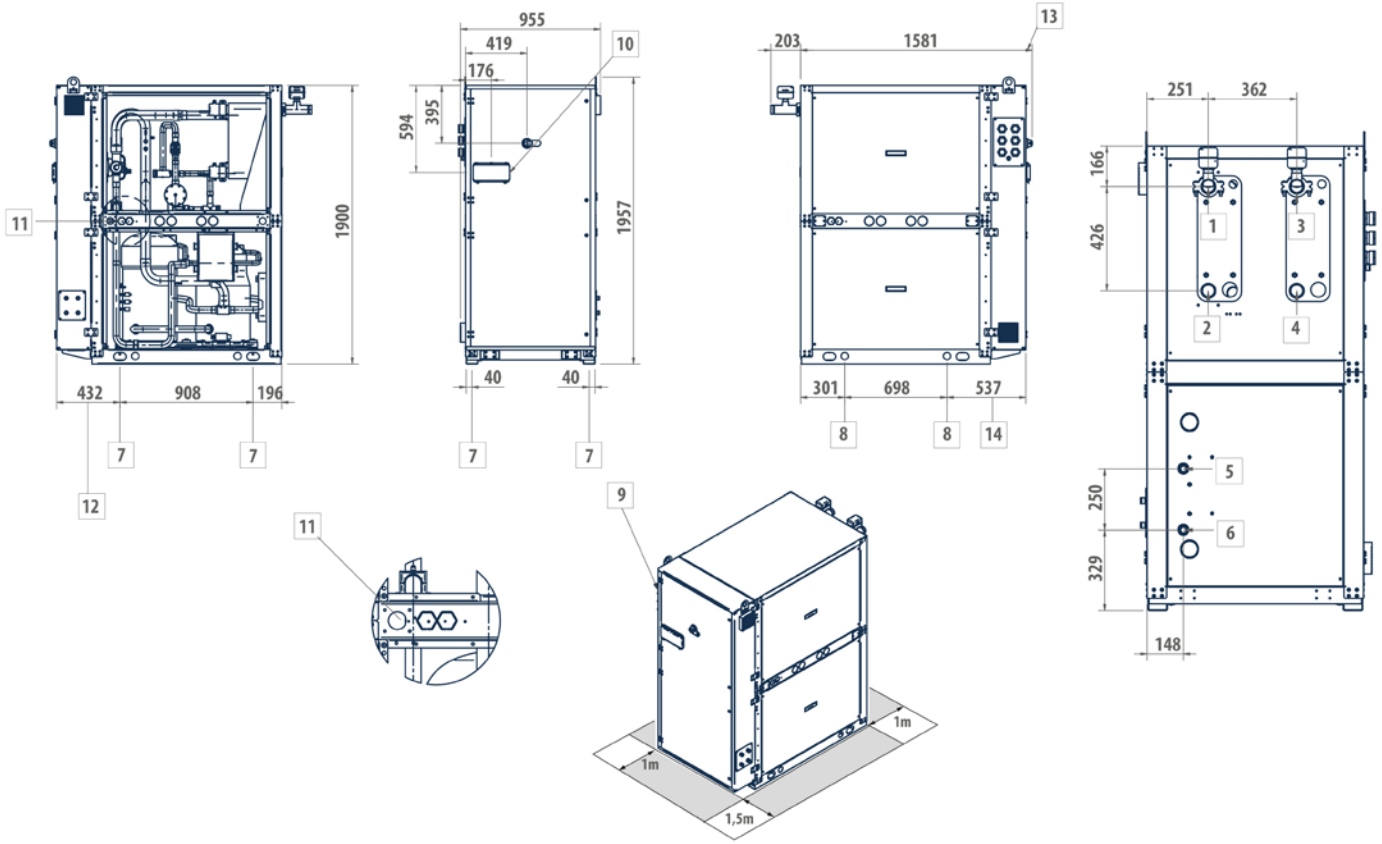

Legenda WRE C

1 Dissipation side - outlet (Victaulic 2")
2 Dissipation side - inlet Victaulic (Victaulic 2")
3 User side - inlet (Victaulic 2")
4 User side - outlet (Victaulic 2")
5 Desuperheater water inlet 1"
6 De-superheater water outlet 1"
7 Vibration dampers
8 Lifting points
9 Power supply input
10 User interface
11 Outlet safety valve G. 3/4" F
12 Outdoor installation 463 mm
13 Outdoor installation 1612 mm
14 Outdoor installation 568 mm

Chiller Flow Swith Position: 2-3

Legenda WRE H

1 Dissipation side - inlet Victaulic (Victaulic 2")
2 Dissipation side - outlet (Victaulic 2")
3 User side - inlet (Victaulic 2")
4 User side - outlet (Victaulic 2")
5 Desuperheater water inlet 1"
6 De-superheater water outlet 1"
7 Vibration dampers
8 Lifting points
9 Power supply input
10 User interface
11 Outlet safety valve G. 3/4" F
12 Outdoor installation 463 mm
13 Outdoor installation 1612 mm
14 Outdoor installation 568 mm

Heat Pump Flow Swith Position: 1-3

Closing panelling available on request

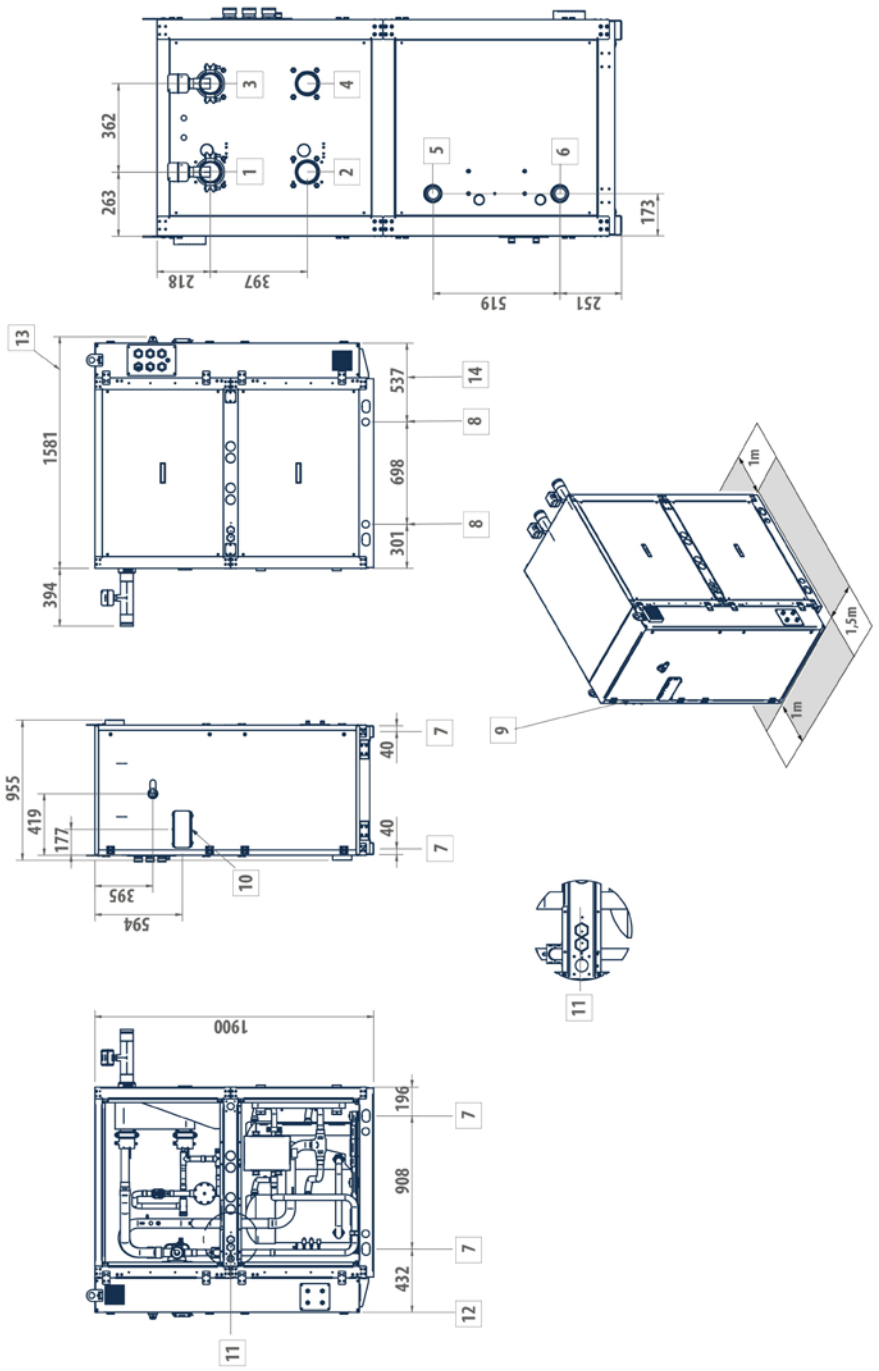

Legenda WRE C

1 Dissipation side - outlet (Victaulic 3")
2 Dissipation side - inlet (Victaulic 3")
3 User side - inlet (Victaulic 3")
4 User side - outlet (Victaulic 3")
5 Desuperheater water inlet 2"
6 De-superheater water outlet 2"
7 Vibration dumpers
8 Lifting points
9 Power supply input
10 User interface
11 Outlet safety valve G. 3/4" F
12 Outdoor installation 463 mm
13 Outdoor installation 1612 mm
14 Outdoor installation 568 mm

Chiller Flow Swith Position: 2-3

Legenda WRE H

1 Dissipation side - inlet (Victaulic 3")
2 Dissipation side - outlet (Victaulic 3")
3 User side - inlet (Victaulic 3")
4 User side - outlet (Victaulic 3")
5 Desuperheater water inlet 2"
6 De-superheater water outlet 2"
7 Vibration dumpers
8 Lifting points
9 Power supply input
10 User interface
11 Outlet safety valve G. 3/4" F
12 Outdoor installation 463 mm
13 Outdoor installation 1612 mm
14 Outdoor installation 568 mm

Heat Pump Flow Swith Position: 1-3

Closing panelling available on request

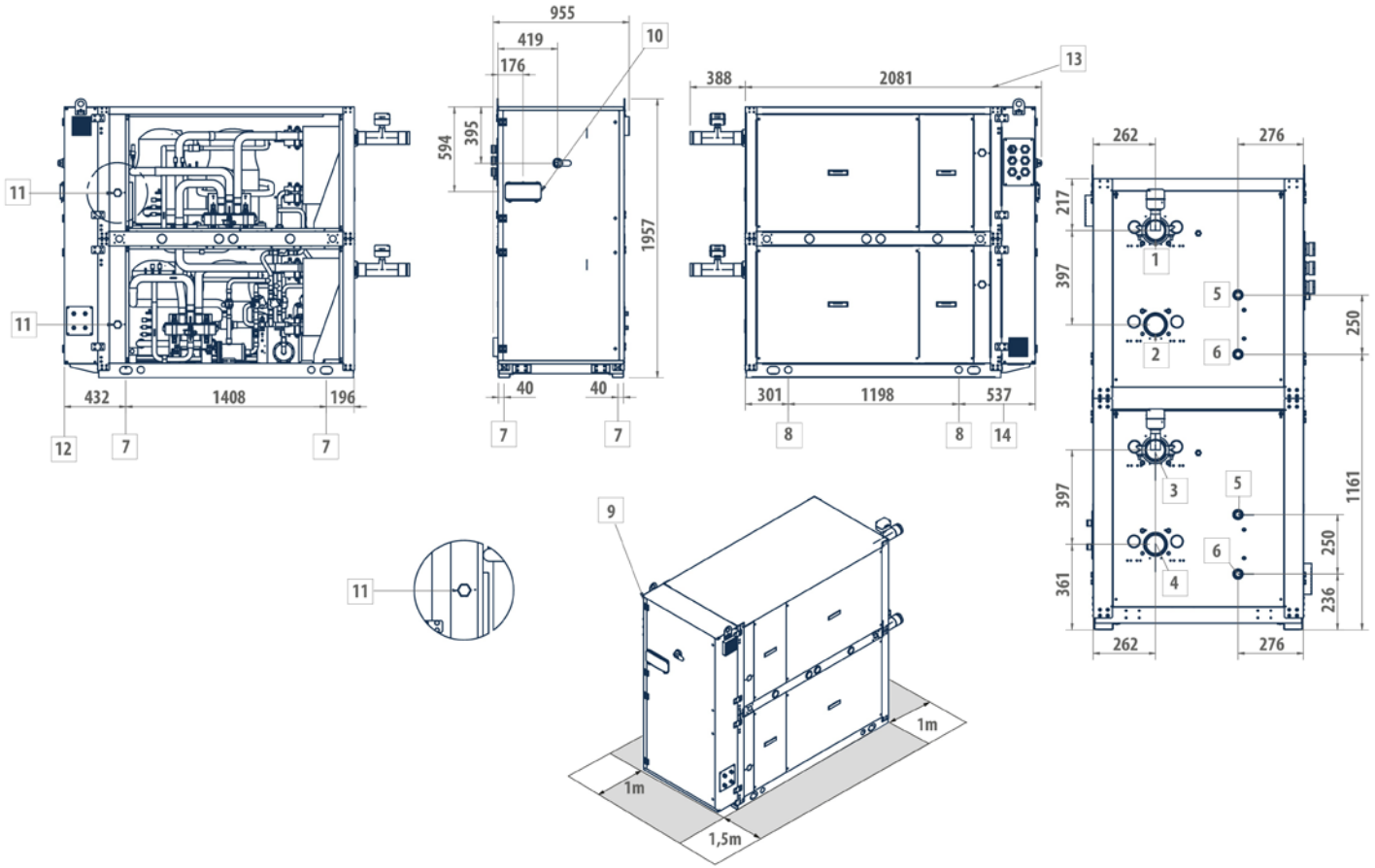

Legenda WRE C

1 User side - inlet (Victaulic 3")
2 User side - outlet (Victaulic 3")
3 Dissipation side - outlet (Victaulic 3")
4 Dissipation side - inlet (Victaulic 3")
5 Desuperheater water inlet 2"
6 De-superheater water outlet 2"
7 Vibration dumpers
8 Lifting points
9 Power supply input
10 User interface
11 Outlet safety valve G. 1'' F
12 Outdoor installation 463 mm
13 Outdoor installation 2112 mm
14 Outdoor installation 568 mm

Chiller Flow Swith Position: 1-4

Legenda WRE H

1 User side - inlet (Victaulic 3")
2 User side - outlet (Victaulic 3")
3 Dissipation side - inlet (Victaulic 3")
4 Dissipation side - outlet (Victaulic 3")
5 Desuperheater water inlet 2"
6 De-superheater water outlet 2"
7 Vibration dumpers
8 Lifting points
9 Power supply input
10 User interface
11 Outlet safety valve G. 1" F
12 Outdoor installation 463 mm
13 Outdoor installation 2112 mm
14 Outdoor installation 568 mm

Heat Pump Flow Swith Position: 1-3

Closing panelling available on request

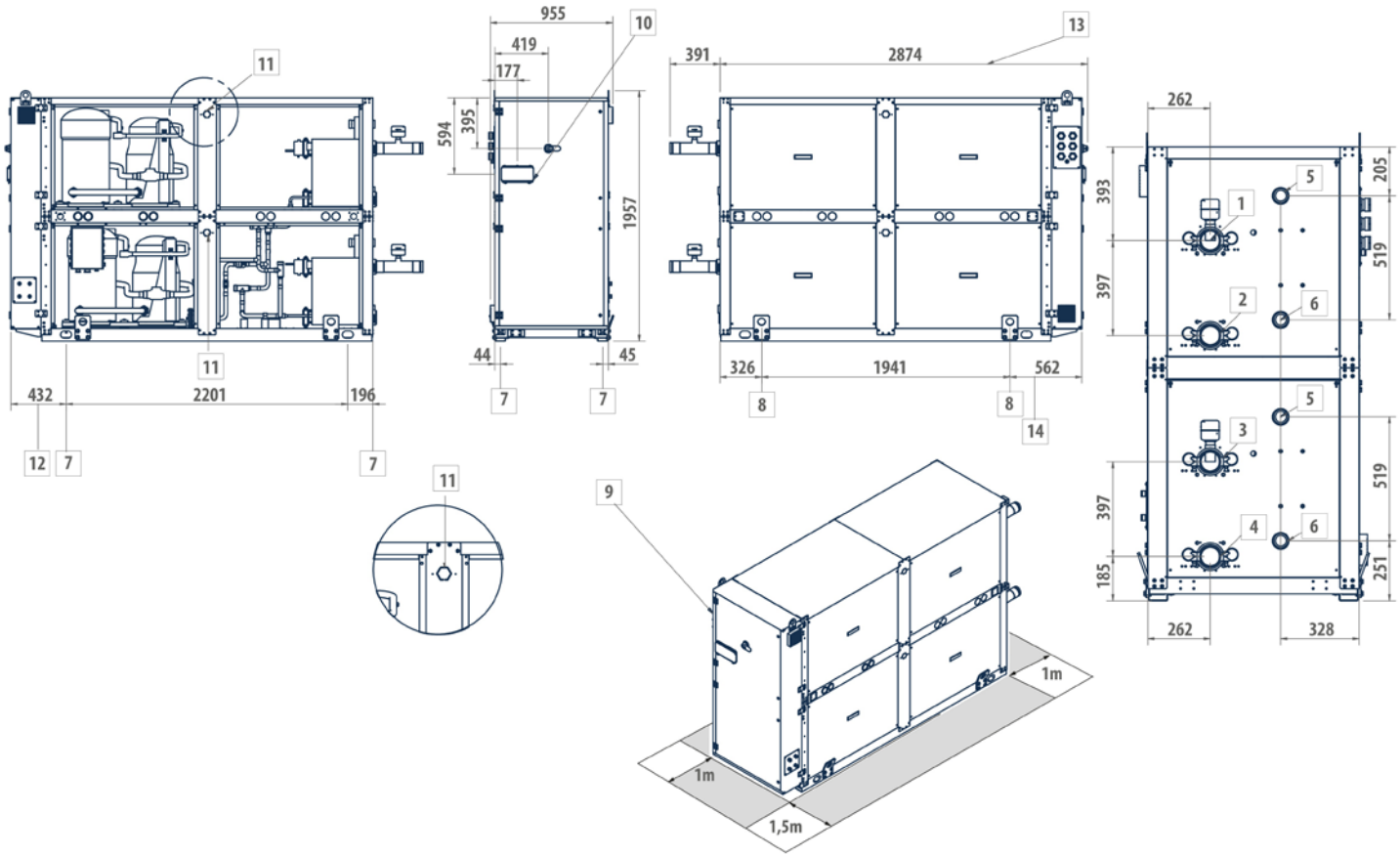

Legenda WRE C

1 User side - inlet (Victaulic 3")
2 User side - outlet (Victaulic 3")
3 Dissipation side - outlet (Victaulic 3")
4 Dissipation side - inlet (Victaulic 3")
5 Desuperheater water inlet 2"
6 De-superheater water outlet 2"
7 Vibration dumpers
8 Lifting points
9 Power supply input
10 User interface
11 Outlet safety valve G. 1'' F
12 Outdoor installation 463 mm
13 Outdoor installation 2905 mm
14 Outdoor installation 593 mm

Chiller Flow Swith Position: 1-4

Legenda WRE H

1 User side - inlet (Victaulic 3")
2 User side - outlet (Victaulic 3")
3 Dissipation side - inlet (Victaulic 3")
4 Dissipation side - outlet (Victaulic 3")
5 Desuperheater water inlet 2"
6 De-superheater water outlet 2"
7 Vibration dumpers
8 Lifting points
9 Power supply input
10 User interface
11 Outlet safety valve G. 1" F
12 Outdoor installation 463 mm
13 Outdoor installation 2905 mm
14 Outdoor installation 593 mm

Heat Pump Flow Swith Position: 1-3

Closing panelling available on request

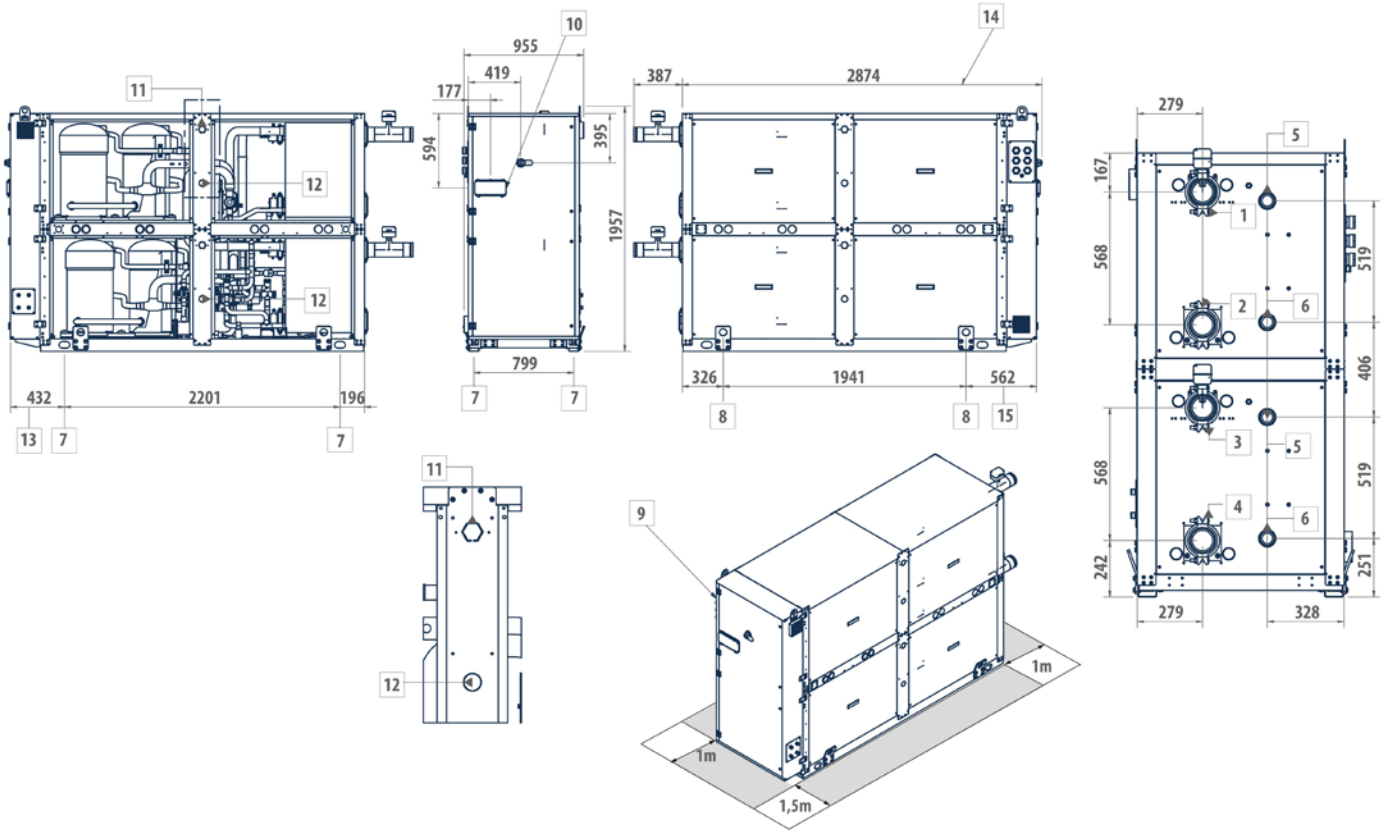

Legenda WRE C

1 User side - inlet (Victaulic 4")
2 User side - outlet (Victaulic 4")
3 Dissipation side - outlet (Victaulic 4")
4 Dissipation side - inlet (Victaulic 4")
5 Desuperheater water inlet 2"
6 De-superheater water outlet 2"
7 Vibration dumpers
8 Lifting points
9 Power supply input
10 User interface
11 Low pressure safety valve outlet WRE 454-504 G. 1'' F; WRE 564 G. 3/4'' F
12 High-pressure relief valve outlet WRE 564 G. 1'' M
13 Outdoor installation 463 mm
14 Outdoor installation 2905 mm
15 Outdoor installation 593 mm

Chiller Flow Swith Position: 1-4

Legenda WRE H

1 User side - inlet (Victaulic 4")
2 User side - outlet (Victaulic 4")
3 Dissipation side - inlet (Victaulic 4")
4 Dissipation side - outlet (Victaulic 4")
5 Desuperheater water inlet 2"
6 De-superheater water outlet 2"
7 Vibration dumpers
8 Lifting points
9 Power supply input
10 User interface
11 Low pressure safety valve outlet WRE 454-504 G. 1'' F; WRE 564 G. 3/4'' F
12 High-pressure relief valve outlet WRE 564 G. 1'' M
13 Outdoor installation 463 mm
14 Outdoor installation 2905 mm
15 Outdoor installation 593 mm

Heat Pump Flow Swith Position: 1-3

Closing panelling available on request

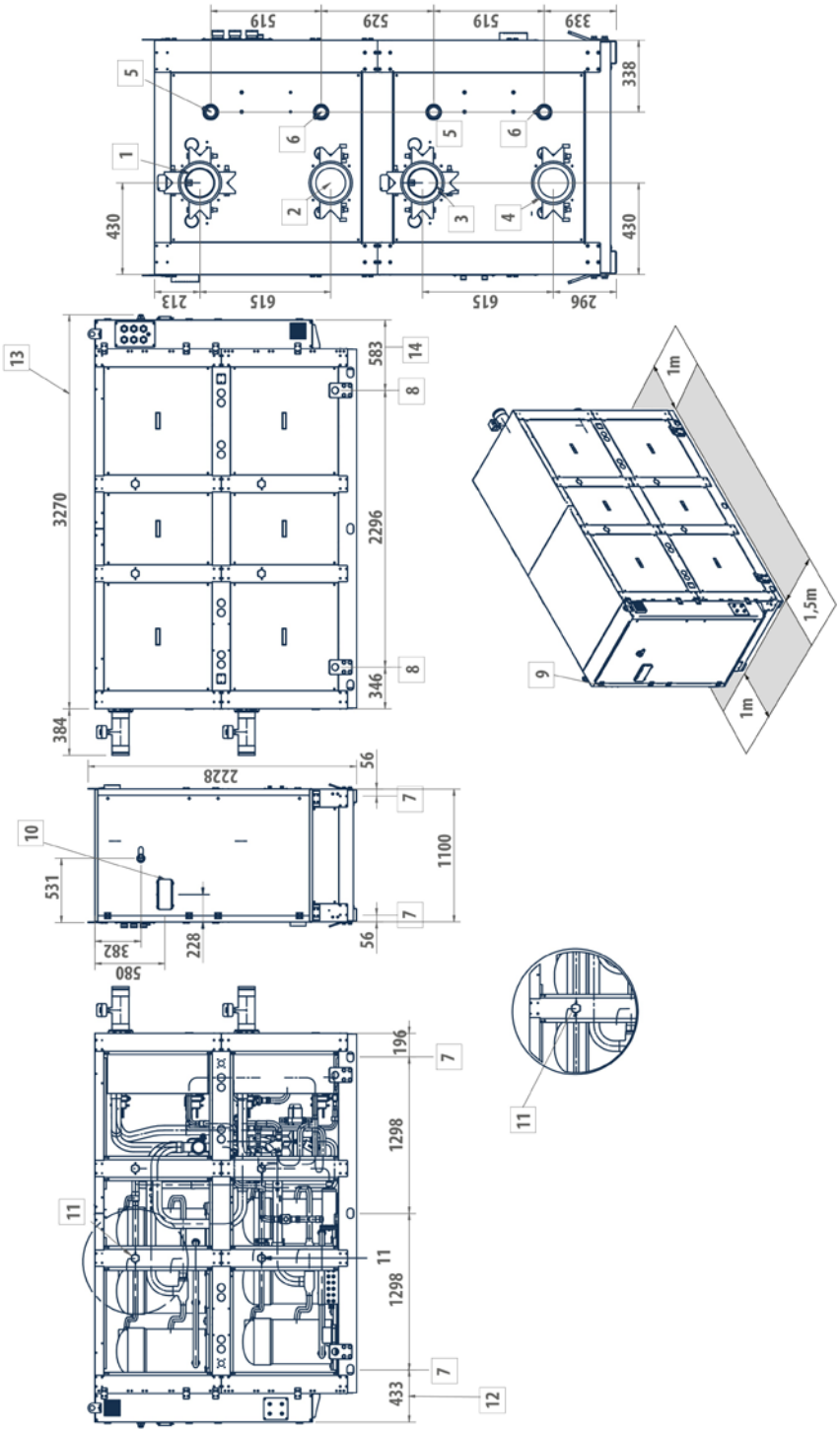

Legenda WRE C

1 User side - inlet (Victaulic 5")
2 User side - outlet (Victaulic 5")
3 Dissipation side - outlet (Victaulic 5")
4 Dissipation side - inlet (Victaulic 5")
5 Desuperheater water inlet 2"
6 De-superheater water outlet 2"
7 Vibration dumpers
8 Lifting points
9 Power supply input
10 User interface
11 Outlet safety valve G. 1" 1/4 F
12 Outdoor installation 462 mm
13 Outdoor installation 3299 mm
14 Outdoor installation 593 mm

Chiller Flow Swith Position: 1-4

Legenda WRE H

1 User side - inlet (Victaulic 5")
2 User side - outlet (Victaulic 5")
3 Dissipation side - inlet (Victaulic 5")
4 Dissipation side - outlet (Victaulic 5")
5 Desuperheater water inlet 2"
6 De-superheater water outlet 2"
7 Vibration dumpers
8 Lifting points
9 Power supply input
10 User interface
11 Outlet safety valve G. 1" 1/4 F
12 Outdoor installation 462 mm
13 Outdoor installation 3299 mm
14 Outdoor installation 593 mm

Heat Pump Flow Swith Position: 1-3

Closing panelling available on request

15 WEIGHTS

This drawing shows the points of the machine for which weights have been calculated, with respect to the basic chiller and heat pump model. The weights are shown in the tables below.

» WRE Frame 1

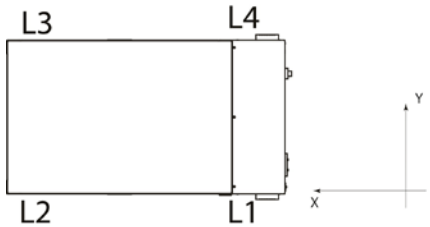

» WRE Frame 2

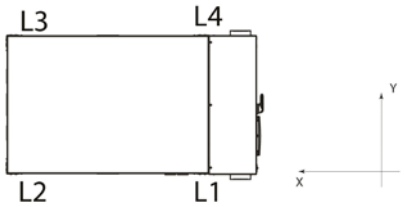

» WRE Frame 3

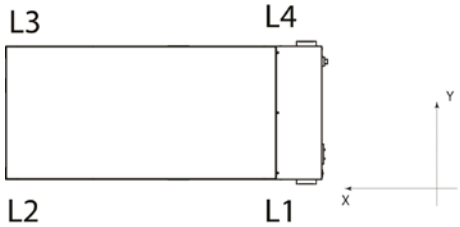

» WRE Frame 4

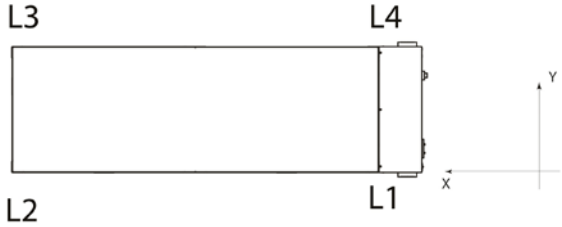

» WRE Frame 5

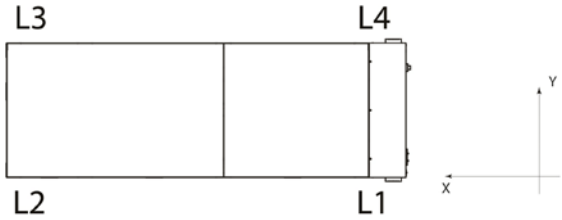

» Lifting center of gravity for transporting unit C version without hydraulic options

WRE		052	062	072	082	092	122	132	152	182
Xb	mm	403	406	411	413	406	384	376	369	367
Yb	mm	691	684	675	670	668	675	674	671	666

WRE		154	184	212	214	242	244	274	302	314
Xb	mm	464	411	362	417	363	422	419	425	391
Yb	mm	890	989	661	978	645	968	970	955	1526

WRE		364	384	454	504	564	606	636	696	746
Xb	mm	394	399	424	420	413	508	509	506	507
Yb	mm	1507	1488	1376	1392	1415	1560	1551	1560	1545

» Lifting center of gravity for transporting unit H version without hydraulic options

WRE		052	062	072	082	092	122	132	152	182
Xb	mm	691	684	675	670	668	675	674	671	666
Yb	mm	403	406	411	413	406	384	376	369	369

WRE		154	184	212	214	242	244	274	302	314
Xb	mm	890	987	661	976	645	966	969	953	1521
Yb	mm	469	417	364	423	365	428	425	438	399

WRE		364	384	454	504	564	606	636	696	746
Xb	mm	1502	1484	1375	1390	1412	1558	1549	1558	1543
Yb	mm	402	407	431	427	420	523	524	521	522

All weights shown below include the R410A refrigerant charge.

» Operating weight C version without hydraulic options

WRE		052	062	072	082	092	122	132	152	182
L1	kg	97	101	104	109	124	166	185	208	218
L2	kg	72	76	79	84	96	150	169	191	204
L3	kg	69	75	82	89	99	114	124	136	145
L4	kg	73	76	77	80	88	130	140	153	159
Total	kg	310	328	343	361	408	560	619	688	727

WRE		154	184	212	214	242	244	274	302	314
L1	kg	286	314	240	323	252	325	365	358	539
L2	kg	190	184	229	191	256	194	213	213	231
L3	kg	311	220	160	239	182	252	280	292	317
L4	kg	210	214	171	220	179	222	243	238	307
Total	kg	997	932	799	973	869	992	1101	1101	1393

WRE		364	384	454	504	564	606	636	696	746
L1	kg	571	574	665	693	735	838	866	869	896
L2	kg	247	254	329	333	340	554	576	563	587
L3	kg	353	372	559	562	566	676	709	692	732
L4	kg	320	323	371	380	394	524	538	525	538
Total	kg	1491	1523	1925	1968	2035	2592	2689	2648	2752

» Operating weight H version without hydraulic options

WRE		052	062	072	082	092	122	132	152	182
L1	kg	98	103	107	111	127	169	189	212	223
L2	kg	73	78	82	86	99	153	173	196	209
L3	kg	70	77	85	91	102	117	128	141	150
L4	kg	74	77	80	82	91	133	145	157	164
Total	kg	315	334	353	371	418	572	635	706	746

WRE		154	184	212	214	242	244	274	302	314
L1	kg	288	315	245	324	258	326	367	361	541
L2	kg	191	186	234	192	261	195	215	216	233
L3	kg	318	227	165	247	188	260	288	309	330
L4	kg	217	221	176	228	185	230	251	255	320
Total	kg	1014	948	820	991	893	1012	1121	1141	1425

WRE		364	384	454	504	564	606	636	696	746
L1	kg	574	576	668	696	738	843	872	874	901
L2	kg	250	256	331	336	343	559	582	568	593
L3	kg	367	386	574	579	584	709	746	730	769
L4	kg	334	337	386	397	411	558	575	563	575
Total	kg	1523	1555	1959	2008	2075	2669	2775	2734	2838

16 ELECTRICAL DATA

» WRE electrical specifications

WRE			052	062	072	082	092	122	132	152	154	182
Maximum current absorption		A	29,0	36,0	42,0	49,0	57,0	72,0	81,0	91,0	90,0	112
Start up current		A	112	161	211	218	178	288	296	356	224	380
Startup current with soft starter		A	67	97	127	131	107	173	178	214	153	228
Power supply		V-ph-Hz	400 - 3N - 50									
Auxiliary power supply		V-ph-Hz	230 - 1 - 50									
Cross-section area of power cables	(1)	mm^2	10,0	10,0	16,0	16,0	16,0	25,0	25,0	25,0	25,0	35,0
Safety fuse F		A	40	50	50	63	63	100	100	100	100	125
Circuit breaker IL		A	40	50	50	63	63	100	100	100	100	125

(1) The shown section is to be considered as the minimum recommended section. The cables must be chosen in compliance with CEI - UNEL 35024/1. standard.

WRE			184	212	214	242	244	274	302	314	364	384
Maximum current absorption		A	114	130	128	151	144	161	166	182	224	240
Start up current		A	293	399	307	420	360	377	510	447	492	508
Startup current with soft starter		A	199	239	210	252	244	259	306	305	340	353
Power supply		V-ph-Hz	400 - 3N - 50									
Auxiliary power supply		V-ph-Hz	230 - 1 - 50									
Cross-section area of power cables	(1)	mm^2	35,0	35,0	35,0	50,0	50,0	50,0	50,0	50,0	70,0	70,0
Safety fuse F		A	125	160	160	200	160	200	200	200	250	315
Circuit breaker IL		A	125	160	160	200	160	200	200	200	250	315

(1) The shown section is to be considered as the minimum recommended section. The cables must be chosen in compliance with CEI - UNEL 35024/1. standard.

WRE			454	504	564	606	636	696	746
Maximum current absorption		A	261	303	317	328	370	412	454
Start up current		A	529	571	661	593	638	680	722
Startup current with soft starter		A	369	403	460	421	457	491	524
Power supply		V-ph-Hz	400 - 3N - 50						
Auxiliary power supply		V-ph-Hz	230 - 1 - 50						
Cross-section area of power cables	(1)	mm^2	70,0	95,0	95,0	120	120	120	120
Safety fuse F		A	315	355	355	355	400	500	500
Circuit breaker IL		A	315	400	400	400	400	630	630

(1) The shown section is to be considered as the minimum recommended section. The cables must be chosen in compliance with CEI - UNEL 35024/1. standard.

— The unit's maximum power input, corresponding to the mains power that must be available in order to operate the unit, can be calculated from the maximum current input, if the supply voltage and the power factor of the mains power supply are known.
— The maximum current absorption refers to the current that will trigger the internal safety devices of the unit. It is the maximum current allowed in the unit This value may never be exceeded; it must be used as a reference for determining the size of the power supply line and the related safety devices (refer to the wiring diagram supplied with the units).

» Main electrical connection of units

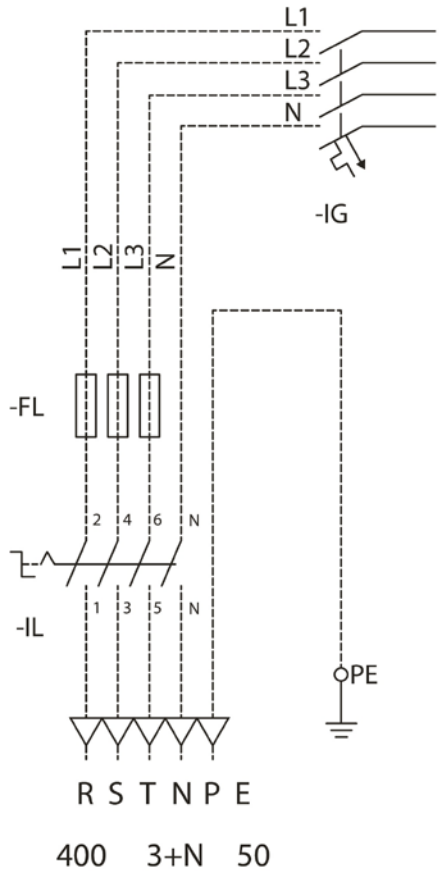

Galletti
AIR CONDITIONING

Galletti S.p.A Organization has a Management System Certified by Kiwa Cermet Italia S.p.A, according to the UNI EN ISO 9001:2015, UNI EN ISO 14001:2015 and UNI ISO 45001:2018 standards.

via Romagnoli 12/a
40010 Bentivoglio (BO) - Italy
Ph. +39 051/8908111 - Fax +039 051/8908122

www.galletti.com