EN

TECHNICAL MANUAL

Ductimax

Duct units

Medium static pressure 2-8 kW

Supervision GARDA | 2 pipes systems | 4 pipes systems | Centrifugal fan | Ducted

PLUS

- Multi speed motor
- Heat exchanger up to 4 rows
- Water connections
- ABS centrifugal fans
- Can be integrated into GARDA
- Incorporable ioniser

UT66002214-05 05/21

EUROVENT CERTIFIED PERFORMANCE
www.eurovent-certification.com

Galletti
AIR CONDITIONING

Dear Customer,
Thank you for placing your trust in one of the products of Galletti S.p.a
This product is the result of our work and our commitment to design, research, and production and has been made from the finest materials, employing state-of-the-art components and production technology.
The CE marking of the product ensures its compliance with the safety requirements of the following directives: the Machinery Directive, the Electromagnetic Compatibility Directive, the Electrical Safety Directive, and the Pressure Equipment Directive. Fulfillment of the Ecodesign requirements is fully in keeping with the environmental awareness that has always guided our company.
The company certification of the Quality and Safety management system ensures that product quality is constantly checked and improved, and that the product is manufactured in full compliance with the highest standards.
By choosing our product, you have opted for Quality, Reliability, Safety, and Sustainability.
At your disposal, once again.
Galletti S.p.a

AVAILABLE VERSIONS

DM xx0 DS	Units for 2 pipes systems
DM xx1 DS	Unit for 2-pipe systems equipped with an additional 1-row exchanger for the hot water circuit
DM 1xx DS	6-speed motor
DM 2xx DS ÷ DM 5xx DS	7-speed motor
DM 6xx DS	Motor 4 speed

TABLE OF CONTENTS

1 MAIN FEATURES . . . . . p. 5
1.1 PERFORMANCE AND COMPACTNESS IN RECESSED CEILING INSTALLATIONS . . . . . p. 5

2 MAIN COMPONENTS . . . . . p. 5
STRUCTURE. . . . . p. 5
ELECTRIC MOTOR. . . . . p. 5
AIR FILTER . . . . . p. 5
2.1 AIR INTAKE. . . . . p. 5
HEAT EXCHANGER . . . . . p. 5
FANS . . . . . p. 5

3 INSTALLATION. . . . . p. 6
3.1 INSTALLATION REQUIREMENTS. . . . . p. 6
3.2 ASSEMBLY OF UNITS . . . . . p. 7

4 AVAILABLE ACCESSORIES . . . . . p. 8

5 RATED TECHNICAL DATA . . . . . p. 9

6 WEIGHTS. . . . . p. 12

7 PERFORMANCES . . . . . p. 13

8 VENTILATION FEATURES. . . . . p. 14

9 SOUND POWER LEVELS FOR 2-PIPES OCTAVE BAND. . . . . p. 15

10 SOUND POWER LEVELS FOR OCTAVE BAND 4 PIPE SYSTEMS AND 1 ROW . . . . . p. 17

11 OVERALL DIMENSIONS . . . . . p. 19

12 ELECTRICAL CONNECTIONS. . . . . p. 21

13 ELECTRICAL WIRES. . . . . p. 22

14 ACCESSORIES. . . . . p. 43

15 MAINTENANCE . . . . . p. 47
15.1 CLEANING THE AIR FILTER. . . . . p. 47
15.2 CLEANING THE HEAT EXCHANGER . . . . . p. 47

OPERATING LIMITS
Thermal carrier fluid: **water**
Water temperature: from **5°C ÷ +95°C**
Air temperature: from **-20°C ÷ 43°C**
Supply voltage: **230 V +/- 10 %**
Maximum water pressure during operation: **10 bar**
Limit of room air relative humidity: **RH<85% not**

condensing

1 MAIN FEATURES

PERFORMANCE AND COMPACTNESS IN RECESSED CEILING INSTALLATIONS

The ducted units DUCTIMAX was designed for conditioning environments where it is required the installation of units in medium head performance and reduced overall dimensions.
The range covers an air flow rate from 300 to 1200 m^3/h distributed over 12 models. The heat exchanger allows the use of DUCTIMAX in the most different conditions.
The bearing structure in fact accommodates a heat exchanger of 3 or 4 rows to which it is possible to combine an additional heat exchanger of 1 or 2 raws for exceptional performance even at low temperature differentials.
Heat exchanger can be optimized for centralized applications such as district cooling. DUCTIMAX was designed to ceiling horizontal installation.
The main condensate drip tray is situated inside the structure of the unit and is at a positive pressure relative to the drain outlet to facilitate condensate drainage.
A wide range of wall-mounted controllers is available, including controllers of an electromechanical type and microprocessor controllers with display.
The use of MYCOMFORT BASE, MYCOMFORT MEDIUM AND MYCOMFORT LARGE or EVO allows connectivity of DUCTIMAX to GARDA. Electric heating elements complete with safety devices are available to integrate the hydronic operation.
The action of the G3 air filter can be combined with an air ionisation system.

2 MAIN COMPONENTS

STRUCTURE

Realized in galvanized steel sheet, thermally and acoustically insulated by self-extinguishing panels class 1.
Height reduced to facilitate installation in a horizontal position, in false ceilings.
The bearing structure contains the tank for collecting and discharging condensate.

ELECTRIC MOTOR

Single-phase asynchronous multi-speed electric motor with permanently connected capacitor and thermal protector, mounted on vibration-damping supports.

AIR FILTER

Washable air filter, made of acrylic fibre, filtration class G2 or G3, applied on the air intake; may be pulled out from below.

AIR INTAKE

Air intake from the front or bottom of the unit, according to system requirements. See figure 15.2 p. 48 and 15.3 p. 48.

HEAT EXCHANGER

High efficiency 3 or 4 rows heat exchanger made of copper tube and alluminium fins secured to the tubes by mechanical expansion.
It is fitted with brass manifold and an air valve.The heat exchanger, usually with left hand water connections can be turned by 180°.
Available on request high efficiency heat exchanger optimized for district cooling application.

FANS

Double suction centrifugal fans made with ABS or aluminium, with statically and dynamically balanced forward-curving blades, directly coupled to the electric motor.

3 INSTALLATION

⚠ **WARNING:** unit installation and start-up must be entrusted to competent personnel and performed in a workmanlike manner, in accordance with current regulations.

⚠ **WARNING:** Install the ducted unit, the line switch (IL) and/or all remote controls in a position out of the reach of persons who are in the bathroom or in the shower.

⚠ **ATTENZIONE:** For safety reason, do not introduce your fingers or other pointed objects in the air outlet grilles.

⚠ **DANGER:** The unit may be used by children of at least 8 years of age and by persons with reduced physical, sensory, or mental capabilities, or who lack experience or the necessary knowledge, provided that they are supervised or after they have received instructions relating to the safe use of the unit and understand the inherent dangers. Children must not play with the unit. Cleaning and maintenance to be carried out by the user must not be performed by unsupervised children.

☞ **IMPORTANT:** It is advisable to install any accessories on the standard unit prior to positioning the latter, making reference to the technical sheets. The air intake and outlet have a rectangular cross-section, with pre-cut holes for fastening the available accessories. To make connection using rectangular ducts it is recommended to use accessories RDD or RDCD, which can be fitted respectively on the intake or outlet section.

NOTE: to install ducts on both the inlet and outlet sides, you will need 1 RD accessory (intake) and 1 RDC accessory (outlet).

☞ **WARNING:** If you wish to make the connections using flexible circular ducts (ø 200), it will be necessary to use accessories PMA or PMAC, which can be fitted respectively on the intake or outlet section.

NOTE: to install flexible ducts (Ø 200), on both the inlet and outlet sides, you will need 1 PMA accessory (intake) and 1 PMAC accessory (outlet).

☞ **WARNING:** with MAF90 or MAFO90 is possible to have frontal air intake to better adapt it to system requirements. For installation follow the instructions in figure 15.3 p. 48.

The exchanger connections can be switched over to the opposite side by carrying out the following steps:

— remove the upper closing panel.
— remove the collecting condensate tray.
— remove the heat exchanger module by taking out the fastening screws (2 per side).
— turn the heat exchanger by 180° (on the vertical axis) and screw it back into the unit again.
— reassemble the tray and the upper closing panel.

3.1 INSTALLATION REQUIREMENTS

Some rules to follow

— Vent air from the exchanger while the pumps are off. For this purpose use the air vent valves situated next to the exchanger connections.
— All ducts, especially the outlet ducts, must be insulated with anti-condensation material.
— An inspection panel must be provided in proximity to the unit to enable maintenance and cleaning operations.
— Install the control panel on the wall; choose an accessible position from where functions may be easily set and which is suitable for taking temperature readings, where applicable. Avoid positions directly exposed to sunlight or direct currents of hot or cold air and make sure there are no obstacles which may preclude a correct temperature reading.

⚠ **WARNING:**

In normal operation, particularly with the fan at minimum speed and ambient air with high relative humidity, condensation may form on the air outlet and on some external parts of the unit.
To avoid such issues while always remaining within the operating limits envisaged for the unit, it is necessary to limit the inlet temperature of the water inside the heat exchanger. In particular, the difference between the air dew point (T_A,D_P) and the inlet water temperature (T_W) must NOT exceed 14 °C, according to the following relationship: **TW>TA,DP-14 °C**

Example: in the case of ambient air at 25 ° C with 75% relative humidity, the dew point temperature is about 20 ° C and therefore the inlet temperature of the water in the battery must be greater then:

— 20-14 = 6 °C in order to avoid condensation on a fancoil equipped with a valve.
— 20-12 = 8 °C If the valve kit accessory can not be installed.

Fan coil with valve								
		Air temperature dry bulb (°C)						
		21	23	25	27	29	31	33
Relative humidity %	40	5	5	5	5	5	5	5
	50	5	5	5	5	5	6	8
	60	5	5	5	5	7	9	11
	70	5	5	6	8	9	11	13
	80	5	6	8	10	12	14	16
	90	6	8	10	12	14	16	18

Fan coil without valve								
		Air temperature dry bulb (°C)						
		21	23	25	27	29	31	33
Relative humidity %	40	6	6	6	6	6	6	6
	50	6	6	6	6	6	8	10
	60	6	6	6	7	9	11	13
	70	6	6	8	10	11	13	15
	80	6	8	10	12	12	16	18
	90	8	10	12	14	14	18	20

In the event the indoor unit is stopped for a prolonged period, with the fan stopped and circulation of cold water in the heat exchanger, condensation may also form on the unit's exterior. In this case it is advisable to install the 3-way (or 2-way) valve accessory in order to stop the flow of water in the coil when the fan is stopped.

During wintertime periods of quiescence, drain water from the system, to prevent ice from forming. If anti-freeze solutions are used, check for their freezing point using the table below.

% Glycol by weight	Freezing temperature (°C)	Capacity adjustment	Pressure drop adjustment
0	0	1,00	1,00
10	-4	0,97	1,05
20	-10	0,92	1,10
30	-16	0,87	1,15
40	-24	0,82	1,20

3.2 ASSEMBLY OF UNITS

Mounting the unit

Insert the vibration dampers provided in the 4 slots indicated for ceiling installation

Fasten the base unit to the ceiling or wall using the 4 slots provided.

— It is recommended to use 8MA threaded bars plus screw anchors of adequate capacity to bear the weight of the unit, and to prepare the positioning of the unit using 3 8MA nuts (2 in the lower part, 1 in the upper part as shown in figure 3.1 p. 7) and two M8 oversized washers with a diameter of 24 mm for each bar, so that the rubber anti-vibration mounts cannot deform or come out of the slot. Before tightening the lock nut, adjust the main nut so as to assure that the unit is properly inclined so as to facilitate condesate drainage (figure 3.2 p. 7). To obtain the proper inclination, tilt the unit so that the intake side is slightly lower (approximately 10 mm) than the outlet side. Make the plumbing connections to the heat exchanger and, where the cooling function is to be used, to the condensate drainage outlet. Use one of the two tray drain outlets, which can be seen on the outside of the unit side panels.

— To connect the unit to the drainage line, use a flexible rubber hose and secure it to the pre-selected drain pipe (ø 3/8") using a metal clamp (use the drain outlet situated on the plumbing connection side).

» Ceiling installation unit

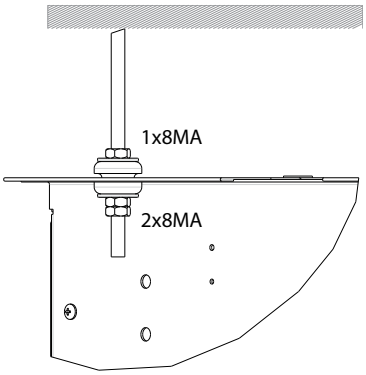

» Condensate discharge proper inclination

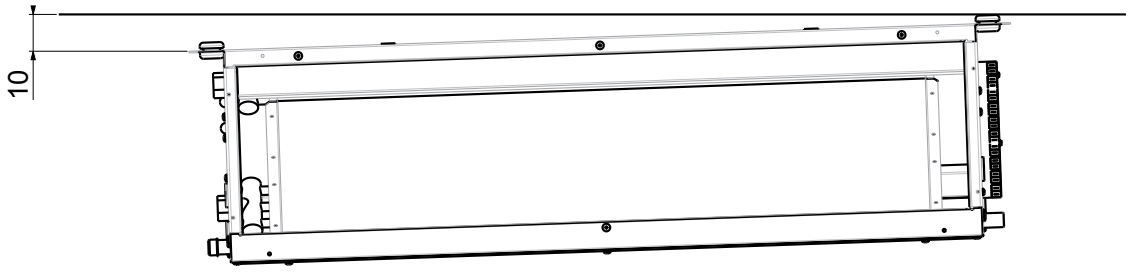

4 AVAILABLE ACCESSORIES

Elecromechanical control panels	
CD	Recess wall-mounted speed switch
CDE	Wall mounted speed selector
TC	Thermostat for minimum water temperature in heating mode (42 °C)
Electronic microprocessor control panels with display	
COB	Finishing plate for LED 503 controller, RAL9005 black
COG	Finishing plate for LED 503 controller, RAL7031 grey
COW	Finishing plate for LED 503 controller, RAL9003 white
DIST	MY COMFORT controller spacer for wall mounting
EVO-2-TOUCH	2.8" touch screen user interface for EVO control
EVOBOARD	Circuit board for EVO control
EVODISP	User interface with display for EVO controller
EYNAVEL	Device for Wi-Fi or Bluetooth communication between EVOBOARD and smartphone
LED503	Recessed wall-mounted electronic display controller LED 503
MCBE	MYCOMFORT BASE electronic controller with display
MCLE	Microprocessor control with display MY COMFORT LARGE
MCME	MYCOMFORT MEDIUM electronic controller with display
MCSUE	Humidity sensor for MY COMFORT (medium e large), EVO
MCSWE	Water sensor for MYCOMFORT and EVO controllers
Electronic microprocessor control panels	
TED 2T	Electronic controller for AC fan control and one ON/OFF 230 V valve
TED 4T	Electronic controller for AC fan control and two ON/OFF 230 V valves
TED SWA	Water temperature sensor for TED controls
Power interface and regulating louver controllers	
KP	Power interface for connecting in parallel up to 4 fun coil units to the one controller
Electrical heating elements	
RE	Heating element with installation kit, relay box and safety devices
Air inlet and outlet grilles	
GA	Aluminium air intake grille, with frame
GM	Aluminium air outlet grille with 2-row fins and subframe
Valves	
V2VDF+STD	2-way valves, ON/OFF or MUDULATING actuator, 230 V or 24 V power supply, hydraulic kit, for main and additional heat exchanger
V2VSTD	2-way valve, ON/OFF or MODULATING actuator, 230 V or 24 V power supply, hydraulic kit, for main heat exchanger
V3VDF	3-way valves, ON/OFF or MODULATING actuator, 230 V or 24 V power supply, hydraulic kit, for additional heat exchanger
V3VSTD	2-way valves, ON/OFF or MODULATING actuator, 230 V or 24 V power supply, hydraulic kit, for main heat exchanger
VPIC	2-way valves pressure independent, ON/OFF or MODULATING actuator, 230 V or 24 V power supply, hydraulic kit, for main heat exchanger
Plenum, air intake modules, air inlet and outlet connectors and cabinets	
MAF90	Air intake module with G3 air filter
MAFO	Air intake module with G4 air filter
MAFO90	Air intake module with G4 air filter
PAF	Intake and delivery plenum, not insulated, with spigot Ø 200 mm
PMA	Intake and delivery plenum, not insulated, with spigot Ø 200 mm
PMAC	Intake and delivery plenum, insulated, with spigot Ø 200 mm
R90	90° uninsulated air inlet/outlet connector
R90C	90° uninsulated air inlet/outlet connector
RD	Straight uninsulated air inlet/outlet connector
RDC	Straight insulated air inlet/outlet connector
Flexible ducts - caps	
TFA	Not insulated flexible ducts, Ø 200 mm (6 m lenght undivisible)
TFM	Insulated flexible ducts, Ø 200 mm (6 m lenght undivisible)
TP	Plastic cap Ø 200 mm
Air inlet and outlet plenum box	
CA	Air Inlet plenum box with double row grille
CAF	Air Inlet plenum box with double row grille 300 x 600 mm and filter G2
CM	Insulated air outlet plenum box with grille
Accessories	
KSC	Condensate drainage pump kit
VRC	Auxiliary water drip tray
Sanitisation system	
JONIX - mic	Sanitizing module JONIX™ (ducted installation)
JONIX - pln	Sanitizing module JONIX™ (installation on plenum)

5 RATED TECHNICAL DATA

» 2 pipes

DUCTIMAX			13			14			23			24		
Speed			min	med	max	min	med	max	min	med	max	min	med	max
Declared speed				2,5,7			2,5,7			1,5,7			1,5,7	
Rated air flow	(E)	m^3/h	109	246	276	109	246	276	171	275	341	171	275	341
Available static pressure	(E)	Pa	10	50	63	10	50	63	19	50	77	19	50	77
Power input	(E)	W	24	57	82	24	57	82	34	69	106	34	69	106
Maximum current absorption		A		0,40			0,40			0,56			0,56	
Total cooling capacity	(1)(E)	kW	0,92	1,72	1,90	0,95	1,91	2,11	1,27	1,90	2,27	1,36	2,11	2,53
Sensible cooling capacity	(1)(E)	kW	0,61	1,21	1,34	0,63	1,30	1,43	0,89	1,34	1,59	0,93	1,44	1,72
FCEER class	(E)		D											
Water flow	(2)	l/h	160	306	340	167	337	375	222	339	408	239	374	453
Water pressure drop	(2)(E)	kPa	2	5	6	2	7	8	3	6	8	4	8	12
Heating capacity	(3)(E)	kW	0,88	1,81	1,99	0,91	1,98	2,21	1,33	1,98	2,35	1,40	2,20	2,68
FCCOP class	(E)		D											
Water flow	(3)	l/h	153	315	346	158	345	384	231	345	408	244	382	466
Water pressure drop	(3)(E)	kPa	1	4	5	2	6	7	2	5	7	3	7	10
Standard coil - number of rows				3			4			3			4	
Total sound power level	(4)	dB(A)	28	49	52	28	49	52	39	50	54	39	50	54
Inlet + radiated sound power level	(4)(E)	dB(A)	26	47	50	26	47	50	37	46	52	37	46	52
Outlet sound power level	(4)(E)	dB(A)	25	46	49	25	46	49	36	45	51	36	45	51
Water content - standard coil		dm^3		1,20			1,60			1,20			1,60	
Power supply cable type			N07V-K											
Cross-section area of power cables	(5)	mm^2		1,00			1,00			1,00			1,00	
Safety fuse F		A		1			1			1			1	
Fuses type			gG											

DUCTIMAX			33			34			43			44		
Speed			min	med	max	min	med	max	min	med	max	min	med	max
Declared speed				1,6,7			1,6,7			1,4,7			1,4,7	
Rated air flow	(E)	m^3/h	195	360	402	195	360	402	305	532	652	305	532	652
Available static pressure	(E)	Pa	19	50	63	19	50	63	17	50	75	17	50	75
Power input	(E)	W	34	85	106	34	85	106	76	143	192	76	143	192
Maximum current absorption		A		0,56			0,56			1,10			1,10	
Total cooling capacity	(1)(E)	kW	1,44	2,28	2,51	1,57	2,69	2,96	1,92	3,17	3,68	2,29	3,78	4,45
Sensible cooling capacity	(1)(E)	kW	1,01	1,69	1,86	1,07	1,86	2,03	1,42	2,39	2,81	1,57	2,61	3,08
FCEER class	(E)		D			D			E			D		
Water flow	(2)	l/h	252	406	449	274	476	527	343	568	664	407	673	798
Water pressure drop	(2)(E)	kPa	2	5	5	3	7	9	3	8	11	6	14	18
Heating capacity	(3)(E)	kW	1,57	2,70	2,96	1,59	2,80	3,10	2,35	3,71	4,31	2,41	3,95	4,68
FCCOP class	(E)		D											
Water flow	(3)	l/h	272	470	515	276	488	538	408	644	749	419	687	814
Water pressure drop	(3)(E)	kPa	2	5	6	2	6	8	4	9	11	5	12	16
Standard coil - number of rows				3			4			3			4	
Total sound power level	(4)	dB(A)	39	50	54	39	50	54	38	52	58	38	52	58
Inlet + radiated sound power level	(4)(E)	dB(A)	37	48	52	37	48	52	36	50	56	36	50	56
Outlet sound power level	(4)(E)	dB(A)	36	47	51	36	47	51	35	49	55	35	49	55
Water content - standard coil		dm^3		1,60			2,20			1,60			2,20	
Power supply cable type			N07V-K											
Cross-section area of power cables	(5)	mm^2		1,00			1,00			1,50			1,50	
Safety fuse F		A		1			1			2			2	
Fuses type			gG											

DUCTIMAX			53			54			63			64		
Speed			min	med	max	min	med	max	min	med	max	min	med	max
Declared speed			1,6,7			1,6,7			5,6,7			5,6,7		
Rated air flow	(E)	m^3/h	333	687	760	333	687	760	1050	1163	1289	1050	1163	1289
Available static pressure	(E)	Pa	12	50	61	12	50	61	40	50	60	40	50	60
Power input	(E)	W	76	167	192	76	167	192	235	280	332	235	280	332
Maximum current absorption		A	1,10			1,10			2,10			2,10		
Total cooling capacity	(1)(E)	kW	2,22	4,22	4,63	2,44	4,79	5,23	6,15	6,66	7,21	6,91	7,49	8,12
Sensible cooling capacity	(1)(E)	kW	1,60	3,09	3,39	1,70	3,33	3,64	4,51	4,88	5,29	4,83	5,23	5,67
FCEER class	(E)		D											
Water flow	(2)	l/h	394	753	828	432	850	930	1095	1191	1295	1225	1333	1448
Water pressure drop	(2)(E)	kPa	2	7	8	3	10	12	13	16	18	20	23	26
Heating capacity	(3)(E)	kW	2,54	4,76	5,17	2,63	5,03	5,49	6,68	7,22	7,80	7,18	7,80	8,46
FCCOP class	(E)		D											
Water flow	(3)	l/h	442	827	898	457	875	955	1162	1256	1357	1248	1356	1472
Water pressure drop	(3)(E)	kPa	2	7	8	3	9	11	12	14	16	17	20	23
Standard coil - number of rows			3			4			3			4		
Total sound power level	(4)	dB(A)	38	55	58	38	55	58	61	63	69	61	63	69
Inlet + radiated sound power level	(4)(E)	dB(A)	36	53	56	36	53	56	59	61	67	59	61	67
Outlet sound power level	(4)(E)	dB(A)	35	52	55	35	52	55	58	60	66	58	60	66
Water content - standard coil		dm^3	2,50			3,30			2,50			3,30		
Power supply cable type			N07V-K											
Cross-section area of power cables	(5)	mm^2	1,50			1,50			1,50			1,50		
Safety fuse F		A	2			2			2			2		
Fuses type			gG											

(1) Water temperature 7°C / 12°C, air temperature dry bulb 27°C, wet bulb 19°C (47% relative humidity) according to EN1397:2015
(2) Water temperature 7°C / 12°C, air temperature dry bulb 27°C, wet bulb 19°C (47% relative humidity)
(3) Water temperature 45°C / 40°C, air temperature 20°C
(4) Sound power measured according to standards ISO 3741 and ISO 3742
(5) The shown section is to be considered as the minimum recommended section. The cables must be chosen in compliance with CEI - UNEL 35024/1. standard.
(E) EUROVENT certified data
Power supply 230-1-50 (V-ph-Hz)

» 4 pipes

DUCTIMAX			13			14			23			24		
Speed			min	med	max	min	med	max	min	med	max	min	med	max
Declared speed			2,5,7			2,5,7			1,5,7			1,5,7		
Rated air flow DF 1R	(E)	m^3/h	109	243	270	109	243	270	170	272	336	170	272	336
Available static pressure DF 1R	(E)	Pa	10	50	63	10	50	63	19	50	77	19	50	77
Power input DF 1R	(E)	W	24	57	82	24	57	82	34	69	106	34	69	106
Maximum current absorption		A	0,40			0,40			0,56			0,56		
Total cooling capacity DF 1R	(1)(E)	kW	0,92	1,70	1,86	0,95	1,88	2,06	1,26	1,88	2,24	1,35	2,09	2,49
Sensible cooling capacity DF 1R	(1)(E)	kW	0,61	1,20	1,31	0,63	1,28	1,40	0,88	1,33	1,57	0,92	1,42	1,70
FCEER class DF 1R	(E)		D											
Water flow DF 1R	(2)	l/h	160	302	333	167	334	368	221	335	404	238	370	447
Water pressure drop DF 1R	(2)(E)	kPa	2	5	6	2	7	8	3	6	8	4	8	12
Heating capacity DF 1R	(3)(E)	kW	1,14	1,93	2,06	1,14	1,93	2,06	1,55	2,07	2,32	1,55	2,07	2,32
FCCOP class DF 1R	(E)		C			C			D			D		
Water flow DF 1R	(3)	l/h	100	169	180	100	169	180	136	181	204	136	181	204
Water pressure drop DF 1R	(3)(E)	kPa	1	2	3	1	2	3	2	3	3	2	3	3
Total sound power level DF 1R	(4)	dB(A)	28	49	52	28	49	52	39	50	54	39	50	54
Additional coil DF - number of rows			1			1			1			1		
Inlet + radiated sound power level DF 1R	(4)(E)	dB(A)	26	47	50	26	47	50	37	46	52	37	46	52
Outlet sound power level DF 1R	(4)(E)	dB(A)	25	46	49	25	46	49	36	45	51	36	45	51
Water content - additional coil DF 1R		dm^3	0,47			0,47			0,47			0,47		
Power supply cable type			N07V-K											
Cross-section area of power cables	(5)	mm^2	1,00			1,00			1,00			1,00		
Safety fuse F		A	1			1			1			1		
Fuses type			gG											

DUCTIMAX			33			34			43			44		
Speed			min	med	max	min	med	max	min	med	max	min	med	max
Declared speed				1,6,7			1,6,7			1,4,7			1,4,7	
Rated air flow DF 1R	(E)	m^3/h	195	357	398	195	357	398	302	524	642	302	524	642
Available static pressure DF 1R	(E)	Pa	19	50	63	19	50	63	17	50	75	17	50	75
Power input DF 1R	(E)	W	34	85	106	34	85	106	76	143	192	76	143	192
Maximum current absorption		A		0,56			0,56			1,10			1,10	
Total cooling capacity DF 1R	(1)(E)	kW	1,44	2,26	2,48	1,57	2,67	2,93	1,89	3,13	3,64	2,27	3,73	4,40
Sensible cooling capacity DF 1R	(1)(E)	kW	1,01	1,68	1,84	1,07	1,84	2,01	1,41	2,35	2,78	1,56	2,57	3,04
FCEER class DF 1R	(E)			D			D			E			D	
Water flow DF 1R	(2)	l/h	252	402	445	274	473	522	339	562	656	403	664	788
Water pressure drop DF 1R	(2)(E)	kPa	2	5	5	3	7	9	3	8	11	6	13	18
Heating capacity DF 1R	(3)(E)	kW	2,09	3,09	3,29	2,09	3,09	3,29	2,80	3,82	4,24	2,80	3,82	4,24
FCCOP class DF 1R	(E)			C			C			D			D	
Water flow DF 1R	(3)	l/h	183	271	288	183	271	288	245	334	371	245	334	371
Water pressure drop DF 1R	(3)(E)	kPa	2	3	4	2	3	4	3	5	6	3	5	6
Total sound power level DF 1R	(4)	dB(A)	36	47	51	36	47	51	38	52	58	38	52	58
Additional coil DF - number of rows				1			1			1			1	
Inlet + radiated sound power level DF 1R	(4)(E)	dB(A)	37	48	52	37	48	52	36	50	56	36	50	56
Outlet sound power level DF 1R	(4)(E)	dB(A)	36	47	51	36	47	51	35	49	55	35	49	55
Water content - additional coil DF 1R		dm^3		0,59			0,59			0,59			0,59	
Power supply cable type			N07V-K											
Cross-section area of power cables	(5)	mm^2		1,00			1,00			1,50			1,50	
Safety fuse F		A		1			1			2			2	
Fuses type			gG											

DUCTIMAX			53			54			63			64		
Speed			min	med	max	min	med	max	min	med	max	min	med	max
Declared speed				1,6,7			1,6,7			5,6,7			5,6,7	
Rated air flow DF 1R	(E)	m^3/h	333	683	755	333	683	755	1050	1163	1289	1050	1163	1289
Available static pressure DF 1R	(E)	Pa	12	50	61	12	50	61	40	50	60	40	50	60
Power input DF 1R	(E)	W	76	167	192	76	167	192	235	280	332	235	280	332
Maximum current absorption		A		1,10			1,10			2,10			2,10	
Total cooling capacity DF 1R	(1)(E)	kW	2,22	4,20	4,60	2,44	4,76	5,20	6,15	6,66	7,21	6,91	7,49	8,12
Sensible cooling capacity DF 1R	(1)(E)	kW	1,60	3,07	3,36	1,70	3,31	3,62	4,51	4,88	5,29	4,83	5,23	5,67
FCEER class DF 1R	(E)		D											
Water flow DF 1R	(2)	l/h	394	749	822	432	846	925	1095	1191	1295	1225	1333	1448
Water pressure drop DF 1R	(2)(E)	kPa	2	7	8	3	10	12	13	16	18	20	23	26
Heating capacity DF 1R	(3)(E)	kW	3,40	5,17	5,45	3,40	5,17	5,45	6,42	6,73	7,06	6,42	6,73	7,06
FCCOP class DF 1R	(E)		D											
Water flow DF 1R	(3)	l/h	297	452	477	297	452	477	562	590	618	562	590	618
Water pressure drop DF 1R	(3)(E)	kPa	6	13	14	6	13	14	19	21	22	19	21	22
Total sound power level DF 1R	(4)	dB(A)	38	55	58	38	55	58	61	63	69	61	63	69
Additional coil DF - number of rows				1			1			1			1	
Inlet + radiated sound power level DF 1R	(4)(E)	dB(A)	36	53	56	36	53	56	59	61	67	59	61	67
Outlet sound power level DF 1R	(4)(E)	dB(A)	35	52	55	35	52	55	58	60	66	58	60	66
Water content - additional coil DF 1R		dm^3		0,97			0,97			0,97			0,97	
Power supply cable type			N07V-K											
Cross-section area of power cables	(5)	mm^2		1,50			1,50			1,50			1,50	
Safety fuse F		A		2			2			2			2	
Fuses type			gG											

(1) Water temperature 7°C / 12°C, air temperature dry bulb 27°C, wet bulb 19°C (47% relative humidity) according to EN1397:2015
(2) Water temperature 7°C / 12°C, air temperature dry bulb 27°C, wet bulb 19°C (47% relative humidity)
(3) Water temperature 65°C / 55°C, air temperature 20°C
(4) Sound power measured according to standards ISO 3741 and ISO 3742
(5) The shown section is to be considered as the minimum recommended section. The cables must be chosen in compliance with CEI - UNEL 35024/1. standard.
(E) EUROVENT certified data
Power supply 230-1-50 (V-ph-Hz)

6 WEIGHTS

DUCTIMAX		13	14	23	24	33	34	43	44	53	54	63	64
Weight - standard version	kg	24,4	24,4	25,4	25,4	33,0	33,0	36,0	36,0	45,0	45,0	51,0	51,0
Weight - DF 1R version	kg	25,8	25,8	26,8	26,8	34,6	34,6	37,6	37,6	47,5	47,5	53,5	53,5

7 PERFORMANCES

Galletti has developed on its www.galletti.com web-area the new ON-LINE integrated platform for product selection, configuration and the making of the economic offer.
The software, whose use is easy and intuitive, allows the identification of the desired products by calculating their performances based on real working conditions and their configuration helping the user in choosing options and accessories. It also allows to obtain a detailed report which includes performances, dimensional drawings, tender specifications and the economic offer.

Product selection:
Filters to make the identification of the requested product easier
Performance calculation and saving of results
Performance comparison between products belonging to different series

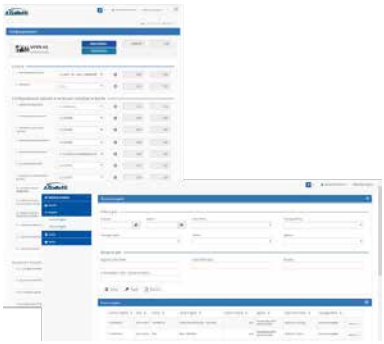

Configuration and project history
Wizard configuration of accessories and options for chillers, heat pumps and hydronic units
Creation of a project which collects all products of interest
Complete management of the storaged history projects

Report:
Generation of a detailed list report in pdf format
Choice of the sections to be included in the print:
— Products performances
— Dimensional drawings
— Tender specifications

8 VENTILATION FEATURES

The pressure drops shown below refer to accessories that are not at all affected by the various sizes of the thermal ventilating units.

Pressure drops refer to the accessory itself and are not related to the size of the thermal ventilating units.

CM - CA - CAF		QA m3/h																			
		50	100	150	200	250	300	400	500	600	700	800	900	1000	1100	1200	1300	1400	1500	1600	1700
CM1	DPA (Pa)	0	1	3	5	8	12	20	31	44	59	-	-	-	-	-	-	-	-	-	-
CM2		0	0	1	1	2	3	5	8	11	14	18	23	28	34	40	46	53	-	-	-
CM3		0	0	0	1	1	1	2	3	5	6	8	10	12	15	18	20	24	27	30	34
CA2		0	0	1	2	3	4	6	10	14	19	24	30	37	44	52	-	-	-	-	-
CA3		0	0	0	1	1	1	3	4	6	7	10	12	15	18	21	24	28	32	36	40
CAF2*		0	1	2	4	6	8	12	18	25	33	41	50	61	-	-	-	-	-	-	-
CAF3*		0	0	1	1	2	3	5	7	10	12	16	19	23	27	32	37	42	47	53	59

9 SOUND POWER LEVELS FOR 2-PIPES OCTAVE BAND

Model	Vr	Lw IN+R	125 Hz	250 Hz	500 Hz	1000 Hz	2000 Hz	4000 Hz	8000 Hz	Lw OUT	125 Hz	250 Hz	500 Hz	1000 Hz	2000 Hz	4000 Hz	8000 Hz
		dB(A)	dB	dB	dB	dB	dB	dB	dB	dB(A)	dB	dB	dB	dB	dB	dB	dB
DM130	7	**50**	54,2	51,9	48,2	43,8	40,2	34,2	25,5	**49**	53,2	50,9	47,2	42,8	39,2	33,2	24,5
	6	**50**	54,2	51,9	48,2	43,8	40,2	34,2	25,5	**49**	53,2	50,9	47,2	42,8	39,2	33,2	24,5
	5	**47**	51,2	48,9	45,2	40,8	37,2	31,2	22,5	**46**	50,2	47,9	44,2	39,8	36,2	30,2	21,5
	4	**46**	50,2	47,9	44,2	39,8	36,2	30,2	21,5	**45**	50,2	46,9	43,2	38,8	35,2	29,2	20,5
	3	**40**	44,2	41,9	38,2	33,8	30,2	24,2	15,5	**38**	42,2	39,9	36,2	31,8	28,2	22,2	13,5
	2	**26**	30,3	28,0	24,3	19,9	16,3	2,10	2,10	**25**	28,7	25,8	23,5	19,8	15,4	11,8	0,00
	1	**29**	28,2	25,9	22,2	17,8	14,2	-	-	**27**	26,2	23,9	20,2	15,8	12,2	-	-
DM140	7	**50**	54,2	51,9	48,2	43,8	40,2	34,2	25,5	**49**	53,2	50,9	47,2	42,8	39,2	33,2	24,5
	6	**50**	54,2	51,9	48,2	43,8	40,2	34,2	25,5	**49**	53,2	50,9	47,2	42,8	39,2	33,2	24,5
	5	**47**	51,2	48,9	45,2	40,8	37,2	31,2	22,5	**46**	50,2	47,9	44,2	39,8	36,2	30,2	21,5
	4	**46**	50,2	47,9	44,2	39,8	36,2	30,2	21,5	**45**	50,2	46,9	43,2	38,8	35,2	29,2	20,5
	3	**40**	44,2	41,9	38,2	33,8	30,2	24,2	15,5	**38**	42,2	39,9	36,2	31,8	28,2	22,2	13,5
	2	**26**	30,3	28,0	24,3	19,9	16,3	2,10	2,10	**25**	0,00	25,8	23,5	19,8	15,4	11,8	0,00
	1	**29**	28,2	25,9	22,2	17,8	14,2	-	-	**27**	26,2	23,9	20,2	15,8	12,2	-	-
DM230	7	**52**	60,2	57,9	54,2	49,8	46,2	40,2	27,5	**51**	56,2	53,9	50,2	45,8	42,2	36,2	27,5
	6	**50**	54,2	51,9	48,2	43,8	40,2	34,2	25,5	**49**	53,2	50,9	47,2	42,8	39,2	33,2	54,2
	5	**46**	52,2	49,9	46,2	41,8	38,2	32,2	21,5	**45**	49,7	49,5	44,6	42,1	35,8	27,5	17,9
	4	**44**	48,2	45,9	42,2	37,8	34,2	28,2	19,5	**43**	47,2	44,9	41,2	36,8	33,2	27,2	48,2
	3	**41**	45,2	42,9	39,2	34,8	31,2	25,2	16,5	**39**	43,2	40,9	37,2	32,8	29,2	23,2	45,2
	2	**38**	42,2	39,9	36,2	31,8	28,2	22,2	13,5	**36**	40,2	37,9	34,2	29,8	26,2	20,2	42,2
	1	**37**	38,2	35,9	32,2	27,8	24,2	18,2	3,00	**36**	41,2	38,9	35,2	30,8	27,2	21,2	3,00
DM240	7	**52**	60,2	57,9	54,2	49,8	46,2	40,2	27,5	**51**	56,2	53,9	50,2	45,8	42,2	36,2	27,5
	6	**50**	54,2	51,9	48,2	43,8	40,2	34,2	25,5	**49**	53,2	50,9	47,2	42,8	39,2	33,2	54,2
	5	**46**	52,2	49,9	46,2	41,8	38,2	32,2	21,5	**45**	49,7	49,5	44,6	42,1	35,8	27,5	17,9
	4	**44**	48,2	45,9	42,2	37,8	34,2	28,2	19,5	**43**	47,2	44,9	41,2	36,8	33,2	27,2	48,2
	3	**41**	45,2	42,9	39,2	34,8	31,2	25,2	16,5	**39**	43,2	40,9	37,2	32,8	29,2	23,2	45,2
	2	**38**	42,2	39,9	36,2	31,8	28,2	22,2	13,5	**36**	40,2	37,9	34,2	29,8	26,2	20,2	42,2
	1	**37**	38,2	35,9	32,2	27,8	24,2	18,2	3,00	**36**	41,2	38,9	35,2	30,8	27,2	21,2	3,00
DM330	7	**52**	56,2	53,9	50,2	45,8	42,2	36,2	27,5	**51**	55,2	52,9	53,2	44,8	41,2	35,2	26,2
	6	**48**	52,2	49,9	46,2	41,8	38,2	32,2	23,5	**47**	51,2	48,9	49,2	40,8	37,2	31,2	22,2
	5	**48**	52,2	49,9	46,2	41,8	38,2	32,2	23,5	**47**	51,2	48,9	45,2	40,8	37,2	31,2	14,5
	4	**44**	48,2	45,9	42,2	37,8	34,2	28,2	19,5	**43**	47,2	44,9	41,2	36,8	33,2	27,2	18,5
	3	**41**	45,2	42,9	39,2	34,8	31,2	25,2	16,5	**39**	43,2	40,9	37,2	32,8	29,2	23,2	22,5
	2	**38**	42,2	39,9	36,2	31,8	28,2	22,2	13,5	**36**	40,2	37,9	34,2	29,8	26,2	20,2	24,5
	1	**37**	41,2	38,9	35,2	30,8	27,2	21,2	3,00	**36**	40,2	37,9	34,2	29,8	26,2	20,2	16,2
DM340	7	**52**	56,2	53,9	50,2	45,8	42,2	36,2	27,5	**51**	55,2	52,9	53,2	44,8	41,2	35,2	26,2
	6	**48**	52,2	49,9	46,2	41,8	38,2	32,2	23,5	**47**	51,2	48,9	49,2	40,8	37,2	31,2	22,2
	5	**48**	52,2	49,9	46,2	41,8	38,2	32,2	23,5	**47**	51,2	48,9	45,2	40,8	37,2	31,2	14,5
	4	**44**	48,2	45,9	42,2	37,8	34,2	28,2	19,5	**43**	47,2	44,9	41,2	36,8	33,2	27,2	18,5
	3	**41**	45,2	42,9	39,2	34,8	31,2	25,2	16,5	**39**	43,2	40,9	37,2	32,8	29,2	23,2	22,5
	2	**38**	42,2	39,9	36,2	31,8	28,2	22,2	13,5	**36**	40,2	37,9	34,2	29,8	26,2	20,2	24,5
	1	**37**	41,2	38,9	35,2	30,8	27,2	21,2	3,00	**36**	40,2	37,9	34,2	29,8	26,2	20,2	16,2
DM430	7	**56**	60,2	57,9	54,2	49,8	46,2	40,2	31,5	**55**	59,2	56,9	53,2	48,8	45,2	39,2	30,5
	6	**53**	57,2	54,9	51,2	46,8	43,2	37,2	28,5	**51**	55,2	52,9	49,2	44,8	41,2	35,2	26,5
	5	**52**	56,2	53,9	50,2	45,8	42,2	36,2	27,5	**49**	53,2	50,9	47,2	42,8	39,2	33,2	24,5
	4	**50**	54,2	51,9	48,2	43,8	40,2	34,2	25,5	**49**	53,2	50,9	47,2	42,8	39,2	33,2	24,5
	3	**45**	49,2	46,9	43,2	38,8	35,2	29,2	20,5	**42**	46,2	43,9	40,2	35,8	32,2	26,2	17,5
	2	**41**	45,2	42,9	39,2	34,8	31,2	25,2	16,5	**39**	43,2	40,9	37,2	32,8	29,2	23,2	14,5
	1	**36**	40,2	37,9	34,2	29,8	26,2	20,2	0,00	**35**	39,2	36,9	33,2	28,8	25,2	19,2	0,00

Model	Vr	Lw IN+R	125 Hz	250 Hz	500 Hz	1000 Hz	2000 Hz	4000 Hz	8000 Hz	Lw OUT	125 Hz	250 Hz	500 Hz	1000 Hz	2000 Hz	4000 Hz	8000 Hz
		dB(A)	dB	dB	dB	dB	dB	dB	dB	dB(A)	dB	dB	dB	dB	dB	dB	dB
DM440	7	**56**	60,2	57,9	54,2	49,8	46,2	40,2	31,5	**55**	59,2	56,9	53,2	48,8	45,2	39,2	30,5
	6	**53**	57,2	54,9	51,2	46,8	43,2	37,2	28,5	**51**	55,2	52,9	49,2	44,8	41,2	35,2	26,5
	5	**52**	56,2	53,9	50,2	45,8	42,2	36,2	27,5	**49**	53,2	50,9	47,2	42,8	39,2	33,2	24,5
	4	**50**	54,2	51,9	48,2	43,8	40,2	34,2	25,5	**49**	53,2	50,9	47,2	42,8	39,2	33,2	24,5
	3	**45**	49,2	46,9	43,2	38,8	35,2	29,2	20,5	**42**	46,2	43,9	40,2	35,8	32,2	26,2	17,5
	2	**41**	45,2	42,9	39,2	34,8	31,2	25,2	16,5	**39**	43,2	40,9	37,2	32,8	29,2	23,2	14,5
	1	**36**	40,2	37,9	34,2	29,8	26,2	20,2	0,00	**35**	39,2	36,9	33,2	28,8	25,2	19,2	0,00
DM530	7	**56**	60,2	57,9	54,2	49,8	46,2	40,2	31,5	**55**	59,2	56,9	53,2	48,8	45,2	39,2	30,5
	6	**53**	57,2	54,9	51,2	46,8	43,2	37,2	28,5	**52**	56,2	53,9	50,2	45,8	42,2	36,2	27,5
	5	**52**	56,2	53,9	50,2	45,8	42,2	36,2	27,5	**49**	53,2	50,9	47,2	42,8	39,2	33,2	24,5
	4	**50**	54,2	51,9	48,2	43,8	40,2	34,2	25,5	**47**	51,2	48,9	45,2	40,8	37,2	31,2	22,5
	3	**45**	49,2	46,9	43,2	38,8	35,2	29,2	20,5	**42**	46,2	43,9	40,2	35,8	32,2	26,2	17,5
	2	**41**	45,2	42,9	39,2	34,8	31,2	25,2	16,5	**39**	43,2	40,9	37,2	32,8	29,2	23,2	14,5
	1	**36**	40,2	37,9	34,2	29,8	26,2	20,2	0,00	**35**	39,2	36,9	33,2	28,8	25,2	19,2	0,00
DM540	7	**56**	60,2	57,9	54,2	49,8	46,2	40,2	31,5	**55**	59,2	56,9	53,2	48,8	45,2	39,2	30,5
	6	**53**	57,2	54,9	51,2	46,8	43,2	37,2	28,5	**52**	56,2	53,9	50,2	45,8	42,2	36,2	27,5
	5	**52**	56,2	53,9	50,2	45,8	42,2	36,2	27,5	**49**	53,2	50,9	47,2	42,8	39,2	33,2	24,5
	4	**50**	54,2	51,9	48,2	43,8	40,2	34,2	25,5	**47**	51,2	48,9	45,2	40,8	37,2	31,2	22,5
	3	**45**	49,2	46,9	43,2	38,8	35,2	29,2	20,5	**42**	46,2	43,9	40,2	35,8	32,2	26,2	17,5
	2	**41**	45,2	42,9	39,2	34,8	31,2	25,2	16,5	**39**	43,2	40,9	37,2	32,8	29,2	23,2	14,5
	1	**36**	40,2	37,9	34,2	29,8	26,2	20,2	0,00	**35**	39,2	36,9	33,2	28,8	25,2	19,2	0,00
DM630	7	**67**	71,2	68,9	65,2	60,8	57,2	51,2	42,5	**66**	70,2	67,9	64,2	59,8	56,2	50,2	31,5
	6	**61**	65,2	62,9	59,2	54,8	51,2	45,2	36,5	**60**	64,2	61,9	58,2	53,8	50,2	44,2	35,5
	5	**59**	63,2	60,9	57,2	52,8	49,2	43,2	34,5	**58**	62,1	59,8	56,1	51,7	48,1	42,1	43,4
	3	**67**	71,2	68,9	65,2	60,8	57,2	51,2	42,5	**65**	69,2	66,9	63,2	58,8	55,2	49,2	30,5
	2	**60**	64,2	61,9	58,2	53,8	50,2	44,2	35,5	**58**	62,2	59,9	56,2	51,8	48,2	42,2	33,5
	1	**57**	61,2	58,9	55,2	50,8	47,2	41,2	32,5	**55**	59,2	56,9	53,2	48,8	45,2	39,2	40,5
DM640	7	**67**	71,2	68,9	65,2	60,8	57,2	51,2	42,5	**66**	70,2	67,9	64,2	59,8	56,2	50,2	31,5
	6	**61**	65,2	62,9	59,2	54,8	51,2	45,2	36,5	**60**	64,2	61,9	58,2	53,8	50,2	44,2	35,5
	5	**59**	63,2	60,9	57,2	52,8	49,2	43,2	34,5	**58**	62,1	59,8	56,1	51,7	48,1	42,1	43,4
	3	**67**	71,2	68,9	65,2	60,8	57,2	51,2	42,5	**65**	69,2	66,9	63,2	58,8	55,2	49,2	30,5
	2	**60**	64,2	61,9	58,2	53,8	50,2	44,2	35,5	**58**	62,2	59,9	56,2	51,8	48,2	42,2	33,5
	1	**57**	61,2	58,9	55,2	50,8	47,2	41,2	32,5	**55**	59,2	56,9	53,2	48,8	45,2	39,2	40,5

Data referring to filter G3 units at PU = 0 Pa - For all operating points and work limits not present in the upper table, refer to the Galletti S.p.A. selection program
LW _out: Octave sound power level - outlet
LW _In + R: Octave sound power level - inlet + radiated
LWA: A-weighted sound power
Vr: Fan speed: **1** = low **7** = high

10 SOUND POWER LEVELS FOR OCTAVE BAND 4 PIPE SYSTEMS AND 1 ROW

Model	Vr	Lw IN+R	125 Hz	250 Hz	500 Hz	1000 Hz	2000 Hz	4000 Hz	8000 Hz	Lw OUT	125 Hz	250 Hz	500 Hz	1000 Hz	2000 Hz	4000 Hz	8000 Hz
		dB(A)	dB	dB	dB	dB	dB	dB	dB	dB(A)	dB	dB	dB	dB	dB	dB	dB
DM130	7	**50**	54,2	51,9	48,2	43,8	40,2	34,2	25,5	**49**	53,2	50,9	47,2	42,8	39,2	33,2	24,5
	6	**50**	54,2	51,9	48,2	43,8	40,2	34,2	25,5	**49**	53,2	50,9	47,2	42,8	39,2	33,2	24,5
	5	**47**	51,2	48,9	45,2	40,8	37,2	31,2	22,5	**46**	50,2	47,9	44,2	39,8	36,2	30,2	21,5
	4	**46**	50,2	47,9	44,2	39,8	36,2	30,2	21,5	**45**	49,2	46,9	43,2	38,8	35,2	29,2	20,5
	3	**40**	44,2	41,9	38,2	33,8	30,2	24,2	15,5	**38**	42,2	39,9	36,2	31,8	28,2	22,2	13,5
	2	**26**	30,3	28,0	24,3	19,9	16,3	2,10	2,10	**25**	0,00	25,8	23,5	19,8	15,4	11,8	0,00
	1	**29**	28,2	25,9	22,2	17,8	14,2	-	-	**27**	26,2	23,9	20,2	15,8	12,2	-	-
DM140	7	**50**	54,2	51,9	48,2	43,8	40,2	34,2	25,5	**49**	53,2	50,9	47,2	42,8	39,2	33,2	24,5
	6	**50**	54,2	51,9	48,2	43,8	40,2	34,2	25,5	**49**	53,2	50,9	47,2	42,8	39,2	33,2	24,5
	5	**47**	51,2	48,9	45,2	40,8	37,2	31,2	22,5	**46**	50,2	47,9	44,2	39,8	36,2	30,2	21,5
	4	**46**	50,2	47,9	44,2	39,8	36,2	30,2	21,5	**45**	49,2	46,9	43,2	38,8	35,2	29,2	20,5
	3	**40**	44,2	41,9	38,2	33,8	30,2	24,2	15,5	**38**	42,2	39,9	36,2	31,8	28,2	22,2	13,5
	2	**26**	30,3	28,0	24,3	19,9	16,3	2,10	2,10	**25**	0,00	25,8	23,5	19,8	15,4	11,8	0,00
	1	**29**	28,2	25,9	22,2	17,8	14,2	-	-	**27**	26,2	23,9	20,2	15,8	12,2	-	-
DM230	7	**52**	56,2	53,9	50,2	45,8	42,2	36,2	27,5	**51**	55,2	52,9	49,2	44,8	41,2	35,2	26,2
	6	**50**	54,2	51,9	48,2	43,8	40,2	34,2	25,5	**49**	53,2	50,9	47,2	42,8	39,2	33,2	54,2
	5	**46**	50,2	47,9	44,2	39,8	36,2	30,2	21,5	**45**	49,2	46,9	43,2	38,8	35,2	29,2	20,2
	4	**44**	48,2	45,9	42,2	37,8	34,2	28,2	19,5	**43**	47,2	44,9	41,2	36,8	33,2	27,2	48,2
	3	**41**	45,2	42,9	39,2	34,8	31,2	25,2	16,5	**39**	43,2	40,9	37,2	32,8	29,2	23,2	45,2
	2	**38**	42,2	39,9	36,2	31,8	28,2	22,2	13,5	**36**	40,2	37,9	34,2	29,8	26,2	20,2	42,2
	1	**37**	41,2	38,9	35,2	30,8	27,2	21,2	3,00	**36**	40,2	37,9	34,2	29,8	26,2	20,2	16,2
DM240	7	**52**	56,2	53,9	50,2	45,8	42,2	36,2	27,5	**51**	55,2	52,9	49,2	44,8	41,2	35,2	26,2
	6	**50**	54,2	51,9	48,2	43,8	40,2	34,2	25,5	**49**	53,2	50,9	47,2	42,8	39,2	33,2	54,2
	5	**46**	50,2	47,9	44,2	39,8	36,2	30,2	21,5	**45**	49,2	46,9	43,2	38,8	35,2	29,2	20,2
	4	**44**	48,2	45,9	42,2	37,8	34,2	28,2	19,5	**43**	47,2	44,9	41,2	36,8	33,2	27,2	48,2
	3	**41**	45,2	42,9	39,2	34,8	31,2	25,2	16,5	**39**	43,2	40,9	37,2	32,8	29,2	23,2	45,2
	2	**38**	42,2	39,9	36,2	31,8	28,2	22,2	13,5	**36**	40,2	37,9	34,2	29,8	26,2	20,2	42,2
	1	**37**	41,2	38,9	35,2	30,8	27,2	21,2	3,00	**36**	40,2	37,9	34,2	29,8	26,2	20,2	16,2
DM330	7	**52**	60,2	57,9	54,2	49,8	46,2	40,2	31,5	**51**	55,2	52,9	49,2	44,8	41,2	35,2	26,2
	6	**48**	54,2	51,9	48,2	43,8	40,2	34,2	25,5	**47**	51,2	48,9	45,2	40,8	37,2	31,2	22,2
	5	**48**	52,2	49,9	46,2	41,8	38,2	32,2	23,5	**47**	51,2	48,9	45,2	40,8	37,2	31,2	14,5
	4	**44**	48,2	45,9	42,2	37,8	34,2	28,2	19,5	**43**	47,2	44,9	41,2	36,8	33,2	27,2	18,5
	3	**41**	45,2	42,9	39,2	34,8	31,2	25,2	16,5	**39**	43,2	40,9	37,2	32,8	29,2	23,2	22,5
	2	**38**	42,2	39,9	36,2	31,8	28,2	22,2	13,5	**36**	40,2	37,9	34,2	29,8	26,2	20,2	24,5
	1	**37**	38,2	35,9	32,2	27,8	24,2	18,2	-	**36**	40,2	37,9	34,2	29,8	26,2	20,2	16,2
DM340	7	**52**	60,2	57,9	54,2	49,8	46,2	40,2	31,5	**51**	55,2	52,9	49,2	44,8	41,2	35,2	26,2
	6	**48**	54,2	51,9	48,2	43,8	40,2	34,2	25,5	**47**	51,2	48,9	45,2	40,8	37,2	31,2	22,2
	5	**48**	52,2	49,9	46,2	41,8	38,2	32,2	23,5	**47**	51,2	48,9	45,2	40,8	37,2	31,2	14,5
	4	**44**	48,2	45,9	42,2	37,8	34,2	28,2	19,5	**43**	47,2	44,9	41,2	36,8	33,2	27,2	18,5
	3	**41**	45,2	42,9	39,2	34,8	31,2	25,2	16,5	**39**	43,2	40,9	37,2	32,8	29,2	23,2	22,5
	2	**38**	42,2	39,9	36,2	31,8	28,2	22,2	13,5	**36**	40,2	37,9	34,2	29,8	26,2	20,2	24,5
	1	**37**	38,2	35,9	32,2	27,8	24,2	18,2	-	**36**	40,2	37,9	34,2	29,8	26,2	20,2	16,2
DM430	7	**56**	60,2	57,9	54,2	49,8	46,2	40,2	31,5	**55**	59,2	56,9	53,2	48,8	45,2	39,2	30,5
	6	**53**	57,2	54,9	51,2	46,8	43,2	37,2	28,5	**51**	55,2	52,9	49,2	44,8	41,2	35,2	26,5
	5	**52**	56,2	53,9	50,2	45,8	42,2	36,2	27,5	**49**	53,2	50,9	47,2	42,8	39,2	33,2	24,5
	4	**50**	54,2	51,9	48,2	43,8	40,2	34,2	25,5	**49**	53,2	50,9	47,2	42,8	39,2	33,2	24,5
	3	**45**	49,2	46,9	43,2	38,8	35,2	29,2	20,5	**42**	46,2	43,9	40,2	35,8	32,2	26,2	17,5
	2	**41**	45,2	42,9	39,2	34,8	31,2	25,2	16,5	**39**	43,2	40,9	37,2	32,8	29,2	23,2	14,5
	1	**36**	40,2	37,9	34,2	29,8	26,2	20,2	0,00	**35**	39,2	36,9	33,2	28,8	25,2	19,2	0,00

Model	Vr	Lw IN+R	125 Hz	250 Hz	500 Hz	1000 Hz	2000 Hz	4000 Hz	8000 Hz	Lw OUT	125 Hz	250 Hz	500 Hz	1000 Hz	2000 Hz	4000 Hz	8000 Hz
		dB(A)	dB	dB	dB	dB	dB	dB	dB	dB(A)	dB	dB	dB	dB	dB	dB	dB
DM440	7	**56**	60,2	57,9	54,2	49,8	46,2	40,2	31,5	**55**	59,2	56,9	53,2	48,8	45,2	39,2	30,5
	6	**53**	57,2	54,9	51,2	46,8	43,2	37,2	28,5	**51**	55,2	52,9	49,2	44,8	41,2	35,2	26,5
	5	**52**	56,2	53,9	50,2	45,8	42,2	36,2	27,5	**49**	53,2	50,9	47,2	42,8	39,2	33,2	24,5
	4	**50**	54,2	51,9	48,2	43,8	40,2	34,2	25,5	**49**	53,2	50,9	47,2	42,8	39,2	33,2	24,5
	3	**45**	49,2	46,9	43,2	38,8	35,2	29,2	20,5	**42**	46,2	43,9	40,2	35,8	32,2	26,2	17,5
	2	**41**	45,2	42,9	39,2	34,8	31,2	25,2	16,5	**39**	43,2	40,9	37,2	32,8	29,2	23,2	14,5
	1	**36**	40,2	37,9	34,2	29,8	26,2	20,2	0,00	**35**	39,2	36,9	33,2	28,8	25,2	19,2	0,00
DM530	7	**56**	60,2	57,9	54,2	49,8	46,2	40,2	31,5	**55**	59,2	56,9	53,2	48,8	45,2	39,2	30,5
	6	**53**	57,2	54,9	51,2	46,8	43,2	37,2	28,5	**52**	56,2	53,9	50,2	45,8	42,2	36,2	27,5
	5	**52**	56,2	53,9	50,2	45,8	42,2	36,2	27,5	**49**	53,2	50,9	47,2	42,8	39,2	33,2	24,5
	4	**50**	54,2	51,9	48,2	43,8	40,2	34,2	25,5	**47**	51,2	48,9	45,2	40,8	37,2	31,2	22,5
	3	**45**	49,2	46,9	43,2	38,8	35,2	29,2	20,5	**42**	46,2	43,9	40,2	35,8	32,2	26,2	17,5
	2	**41**	45,2	42,9	39,2	34,8	31,2	25,2	16,5	**39**	43,2	40,9	37,2	32,8	29,2	23,2	14,5
	1	**36**	40,2	37,9	34,2	29,8	26,2	20,2	0,00	**35**	39,2	36,9	33,2	28,8	25,2	19,2	0,00
DM540	7	**56**	60,2	57,9	54,2	49,8	46,2	40,2	31,5	**55**	59,2	56,9	53,2	48,8	45,2	39,2	30,5
	6	**53**	57,2	54,9	51,2	46,8	43,2	37,2	28,5	**52**	56,2	53,9	50,2	45,8	42,2	36,2	27,5
	5	**52**	56,2	53,9	50,2	45,8	42,2	36,2	27,5	**49**	53,2	50,9	47,2	42,8	39,2	33,2	24,5
	4	**50**	54,2	51,9	48,2	43,8	40,2	34,2	25,5	**47**	51,2	48,9	45,2	40,8	37,2	31,2	22,5
	3	**45**	49,2	46,9	43,2	38,8	35,2	29,2	20,5	**42**	46,2	43,9	40,2	35,8	32,2	26,2	17,5
	2	**41**	45,2	42,9	39,2	34,8	31,2	25,2	16,5	**39**	43,2	40,9	37,2	32,8	29,2	23,2	14,5
	1	**36**	40,2	37,9	34,2	29,8	26,2	20,2	0,00	**35**	39,2	36,9	33,2	28,8	25,2	19,2	0,00
DM630	7	**67**	71,2	68,9	65,2	57,2	57,2	51,2	42,5	**66**	70,2	67,9	64,2	59,8	56,2	50,2	31,5
	6	**61**	65,2	62,9	59,2	51,2	51,2	45,2	36,5	**60**	64,2	61,9	58,2	53,8	50,2	44,2	35,5
	5	**59**	63,2	60,9	57,2	49,2	49,2	43,2	34,5	**58**	62,1	59,8	56,1	51,7	48,1	42,1	43,4
	3	**67**	71,2	68,9	65,2	60,8	57,2	51,2	42,5	**65**	69,2	66,9	63,2	58,8	55,2	49,2	30,5
	2	**60**	64,2	61,9	58,2	53,8	50,2	44,2	35,5	**58**	62,2	59,9	56,2	51,8	48,2	42,2	33,5
	1	**57**	61,2	58,9	55,2	50,8	47,2	41,2	32,5	**55**	59,2	56,9	53,2	48,8	45,2	39,2	40,5
DM640	7	**67**	71,2	68,9	65,2	57,2	57,2	51,2	42,5	**66**	70,2	67,9	64,2	59,8	56,2	50,2	31,5
	6	**61**	65,2	62,9	59,2	51,2	51,2	45,2	36,5	**60**	64,2	61,9	58,2	53,8	50,2	44,2	35,5
	5	**59**	63,2	60,9	57,2	49,2	49,2	43,2	34,5	**58**	62,1	59,8	56,1	51,7	48,1	42,1	43,4
	3	**67**	71,2	68,9	65,2	60,8	57,2	51,2	42,5	**65**	69,2	66,9	63,2	58,8	55,2	49,2	30,5
	2	**60**	64,2	61,9	58,2	53,8	50,2	44,2	35,5	**58**	62,2	59,9	56,2	51,8	48,2	42,2	33,5
	1	**57**	61,2	58,9	55,2	50,8	47,2	41,2	32,5	**55**	59,2	56,9	53,2	48,8	45,2	39,2	40,5

Data referring to filter G3 units at PU = 0 Pa - For all operating points and work limits not present in the upper table, refer to the Galletti S.p.A. selection program
LW _out: Octave sound power level - outlet
LW _In + R: Octave sound power level - inlet + radiated
LW_A:A-weighted sound power
Vr: Fan speed: 1 = low 7 = high

11 OVERALL DIMENSIONS

» Ductimax 1 - 4

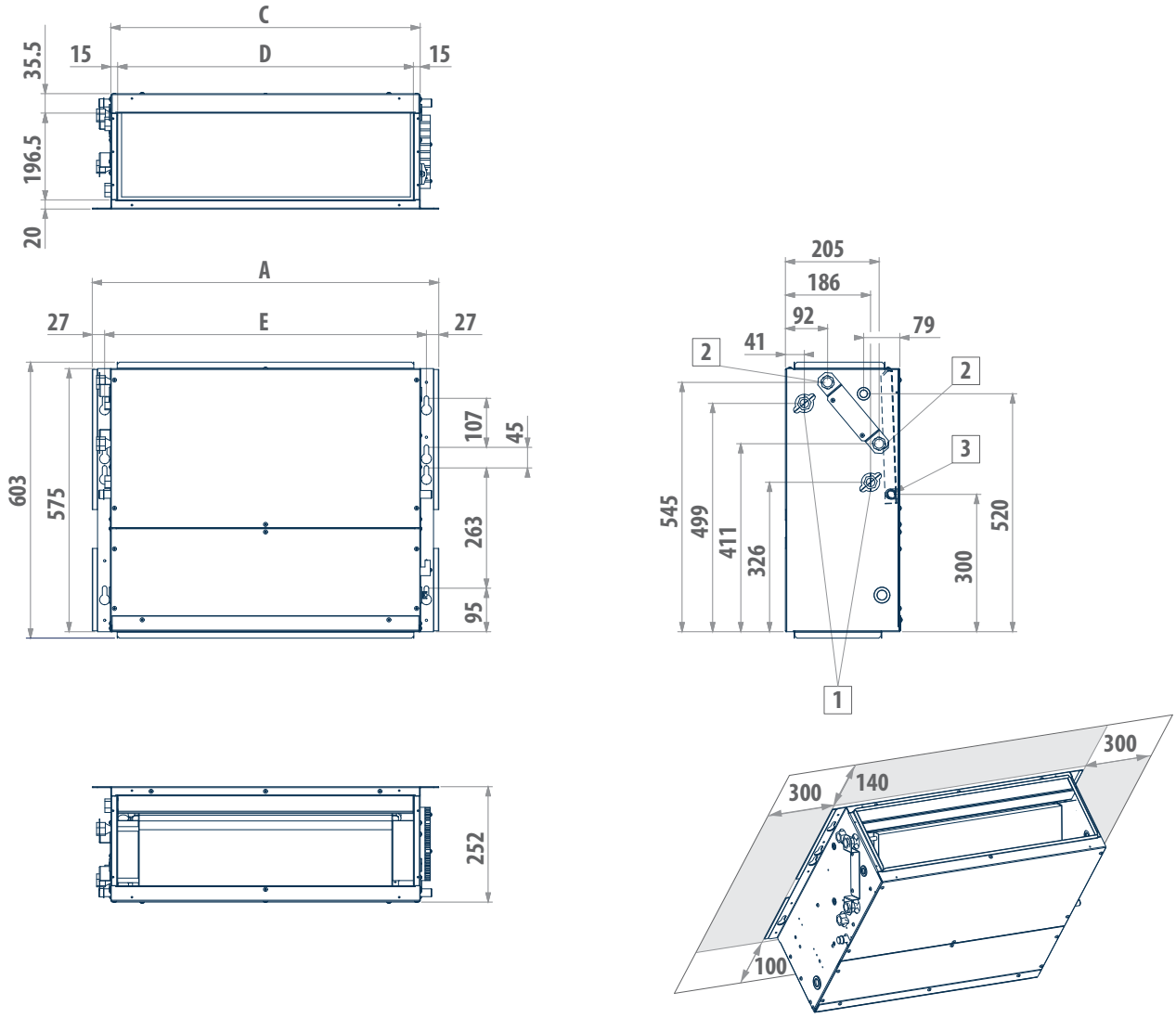

LEGEND

1 Water connections standard heat exchanger 1/2" female gas
2 Water connections additional heat exchanger 1/2" female gas
3 Condensate discharge diameter ø 17

DUCTIMAX		13	14	23	24	33	34	43	44
A	mm	758	758	758	758	968	968	968	968
C	mm	677	677	677	677	887	887	887	887
D	mm	648	648	648	648	858	858	858	858
E	mm	707	707	707	707	917	917	917	917

» Ductimax 5 - 6

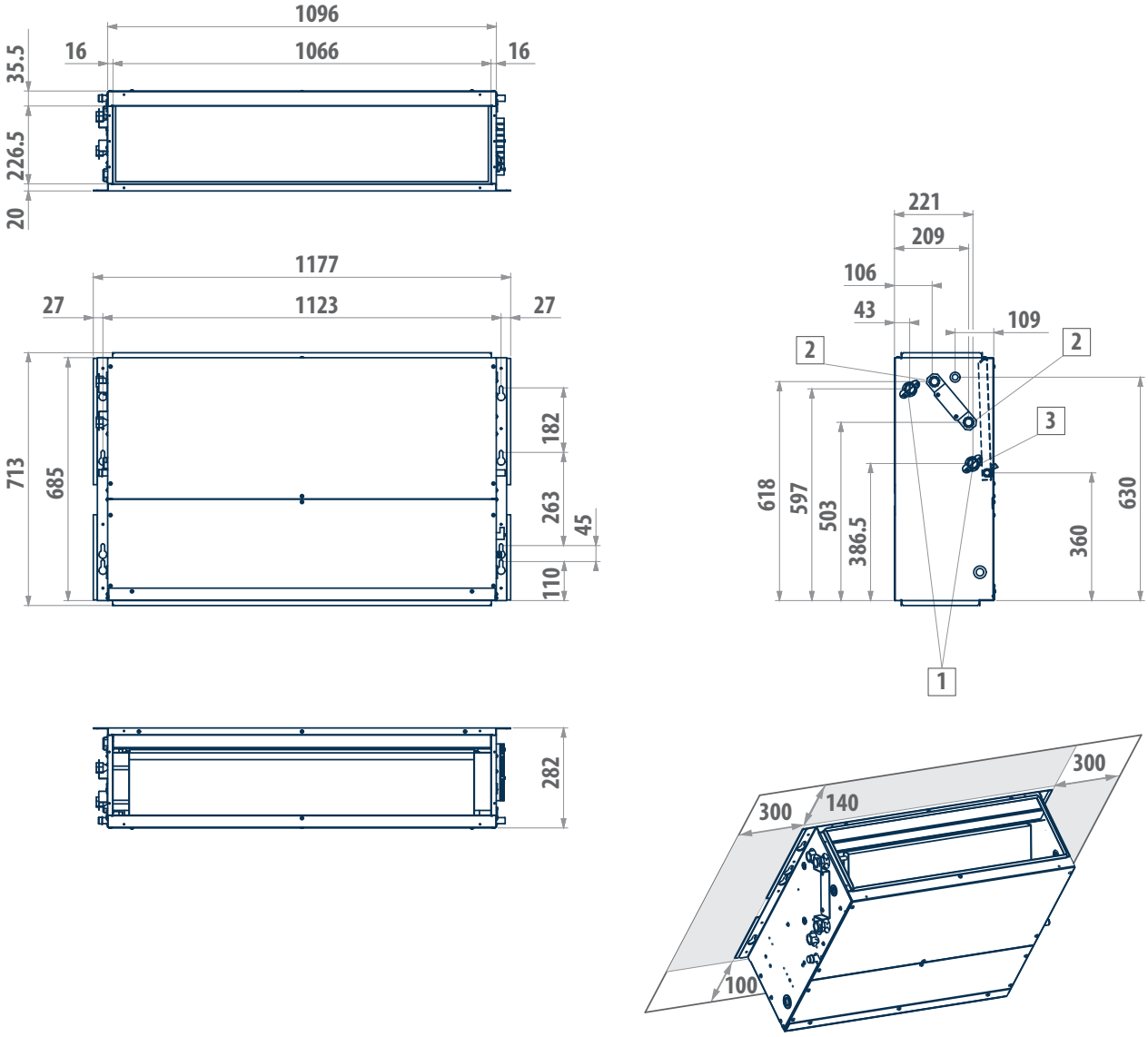

LEGEND

1 Standard heat exchanger water connections 3/4" gas female
2 Water connections additional heat exchanger 1/2" female gas
3 Condensate discharge diameter ø 17

12 ELECTRICAL CONNECTIONS

Make the electrical connections with the power supply disconnected, in accordance with current safety regulations.
All the wiring must be done by qualified personnel.
For each thermal ventilating unit provide a main circuit breaker (IL), with opening contacts separated by at least 3 mm and an adequate protection fuse (F).
Electrical intakes are shown on the rating labels on the units.
During installation, strictly abide by the indications on the wiring diagram for the unit-control panel combination.
See electrical wirings from page 13.1 p. 22.
DUCTIMAX 13-14 6-speed motor (+ EVO/ MYCOMFORT / TED)
DUCTIMAX 23-54 7-speed motor (+ EVO/ MYCOMFORT / TED)
DUCTIMAX 63-64 Motor 4 speed (+ EVO/ MYCOMFORT / TED)
NOTE: The electric wires (power and control circuits) must be pulled in through the gland on the side of the electric box where the plumbing connections are located and then connected to the terminals.

⚠ **WARNING:** COMMON motor wire = WHITE, wrong connection may cause serious damages to the motor.

13 ELECTRICAL WIRES

Traced connection are on responsability of the installer

⚠ Il cavo COMUNE del motore é quello di colore

BIANCO: il suo errato collegamento provoca danni irreparabili al motore.

» DM1 - Wiring diagram

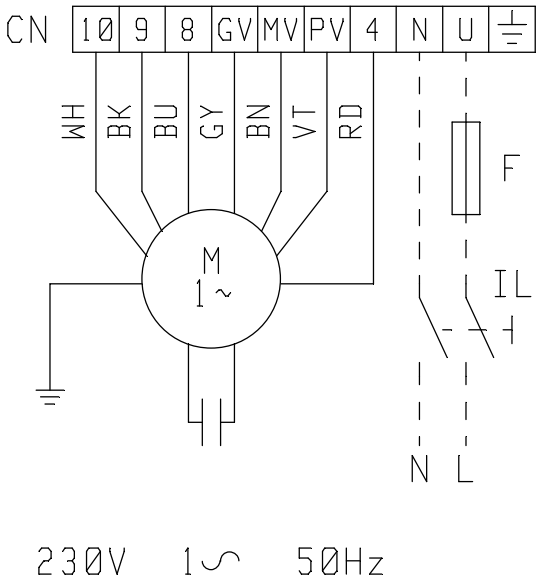

L	Phase
PE	Ground
N	Neutre
F	Fuse (not provided)
IL	Circuit breaker (not supplied)
.....	Wirings made by supplier
WH	White
BK	Nero

BU	Blue
BN	Brown
GY	Grey
GN	Green
YE	Yellow
RD	Rosso
GYNE	Yellow/green = ground (PE)

» DM2 - DM 5 Wiring diagram

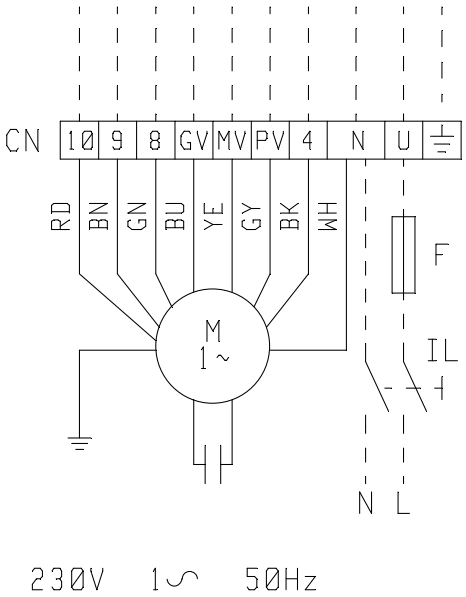

L	Phase	**BU**	Blue
PE	Ground	**BN**	Brown
N	Neutre	**GY**	Grey
F	Fuse (not provided)	**GN**	Green
IL	Circuit breaker (not supplied)	**YE**	Yellow
.....	Wirings made by supplier	**RD**	Rosso
WH	White	**GYNE**	Yellow/green = ground (PE)
BK	Nero		

» DM6 - Wiring diagram

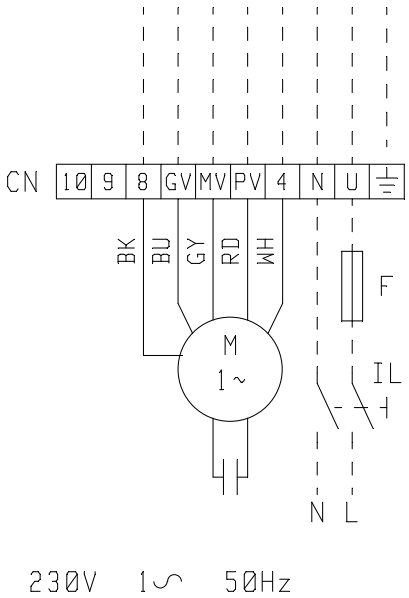

L	Phase	**BU**	Blue
PE	Ground	**BN**	Brown
N	Neutre	**GY**	Grey
F	Fuse (not provided)	**GN**	Green
IL	Circuit breaker (not supplied)	**YE**	Yellow
.....	Wirings made by supplier	**RD**	Rosso
WH	White	**GYNE**	Yellow/green = ground (PE)
BK	Nero		

» MCB V DM 1

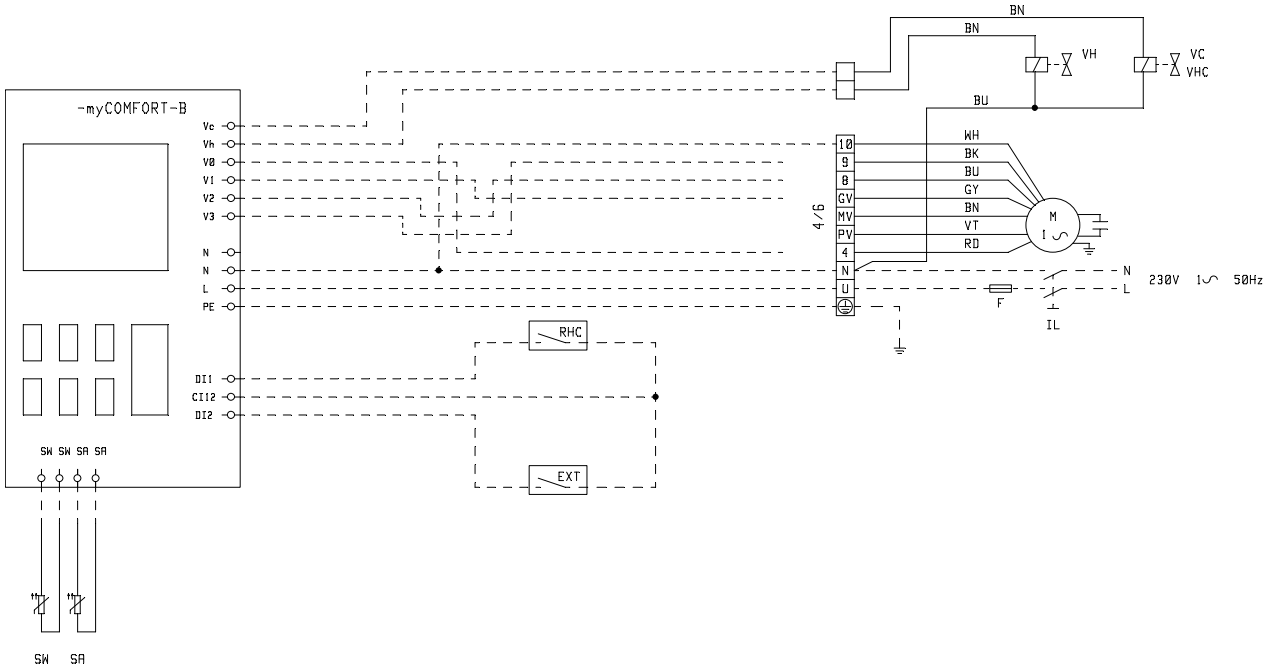

WH(M): White = Neutral
BK(M): Black
BU(M): Blue
GY(M): Grey
BN(M): Brown
VT(M): Purple
RD : Red
BN (VC/H): Brown = valve actuator line
BU (VC/H): Blue = valve actuator neutral

» MCB V dm 2-5

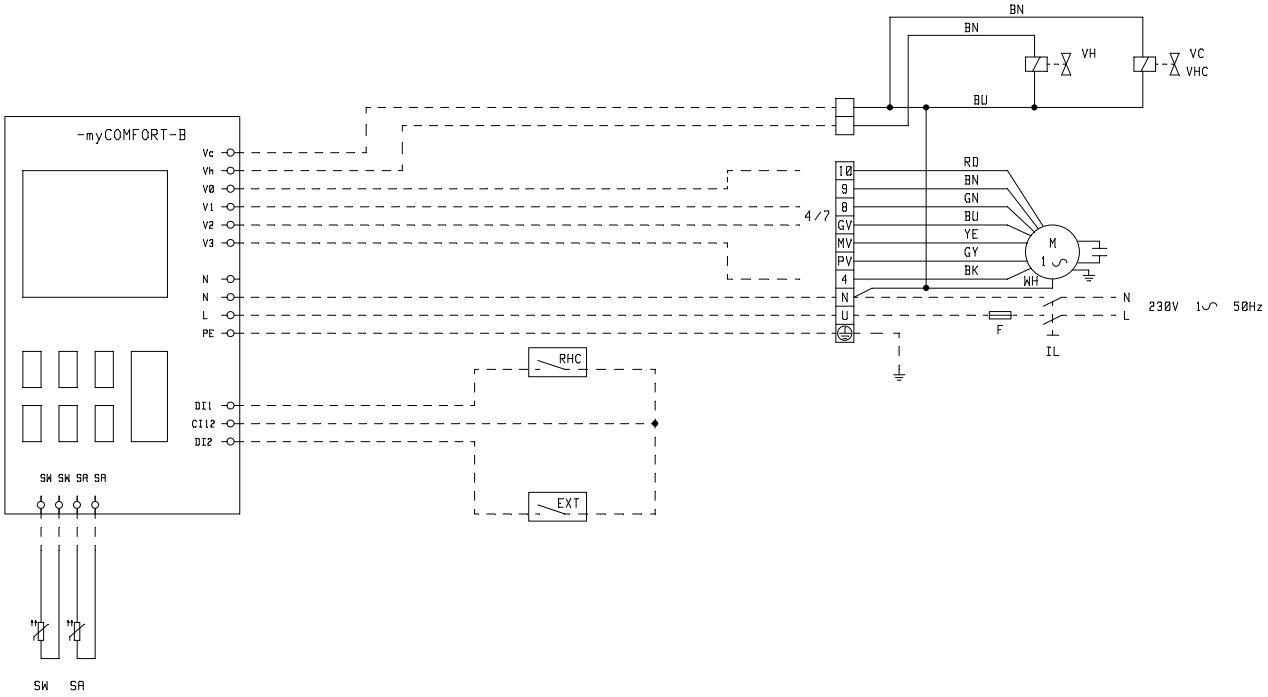

WH(M): White = Neutral
BK(M): Black
BU(M): Blue
GY(M): Grey
BN(M): Brown
VT(M): Purple
RD : Red
YE(M): Yellow
GN(M): Green
BN (VC/H): Brown = valve actuator line
BU (VC/H): Blue = valve actuator neutral

» MCB V DM 6

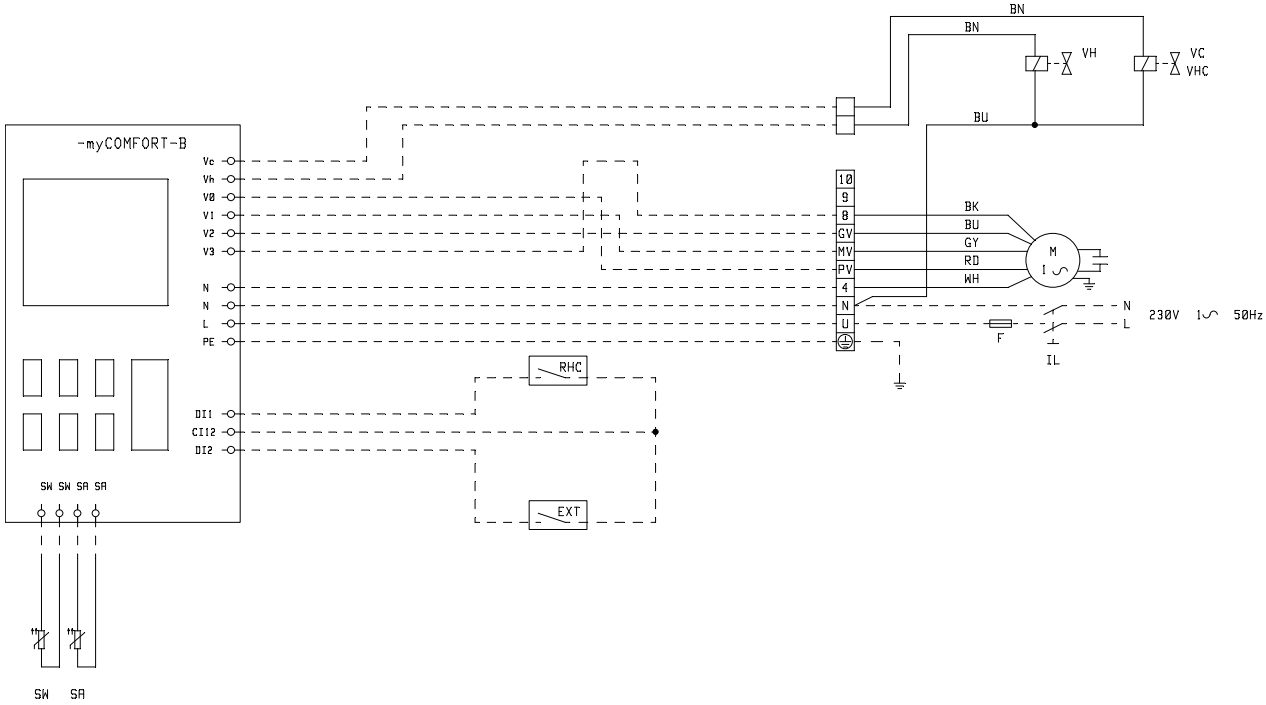

WH(M): Bianco
BK(M): Black
BU(M): Blue
GY(M): Grey
RD : Red
BN (VC/H): Brown = valve actuator line
BU (VC/H): Blue = valve actuator neutral

» MCB V + RE DM 1

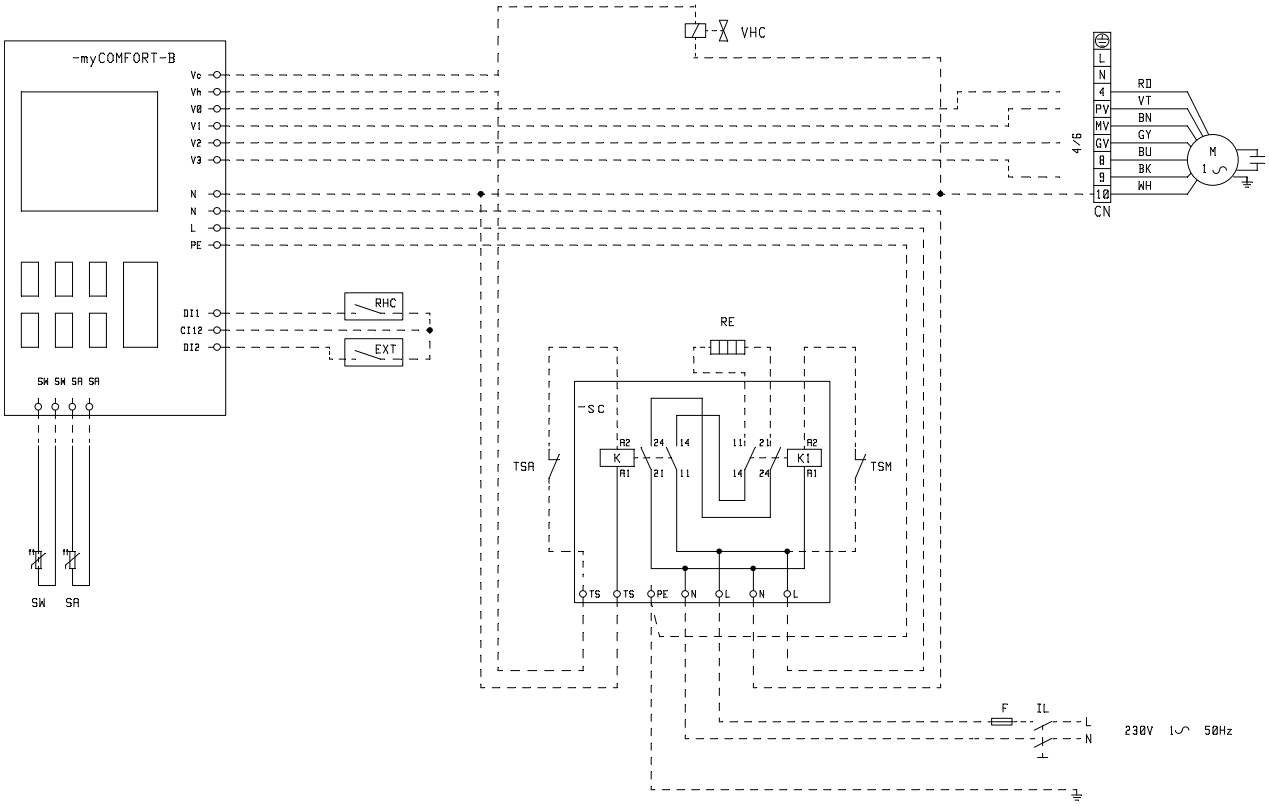

WH(M): White = Neutral
BK(M): Black
BU(M): Blue
GY(M): Grey
BN(M): Brown
VT(M): Purple
RD : Red
WH(VC/H): White = valve actuator neutral

» MCB V + RE DM 2-5

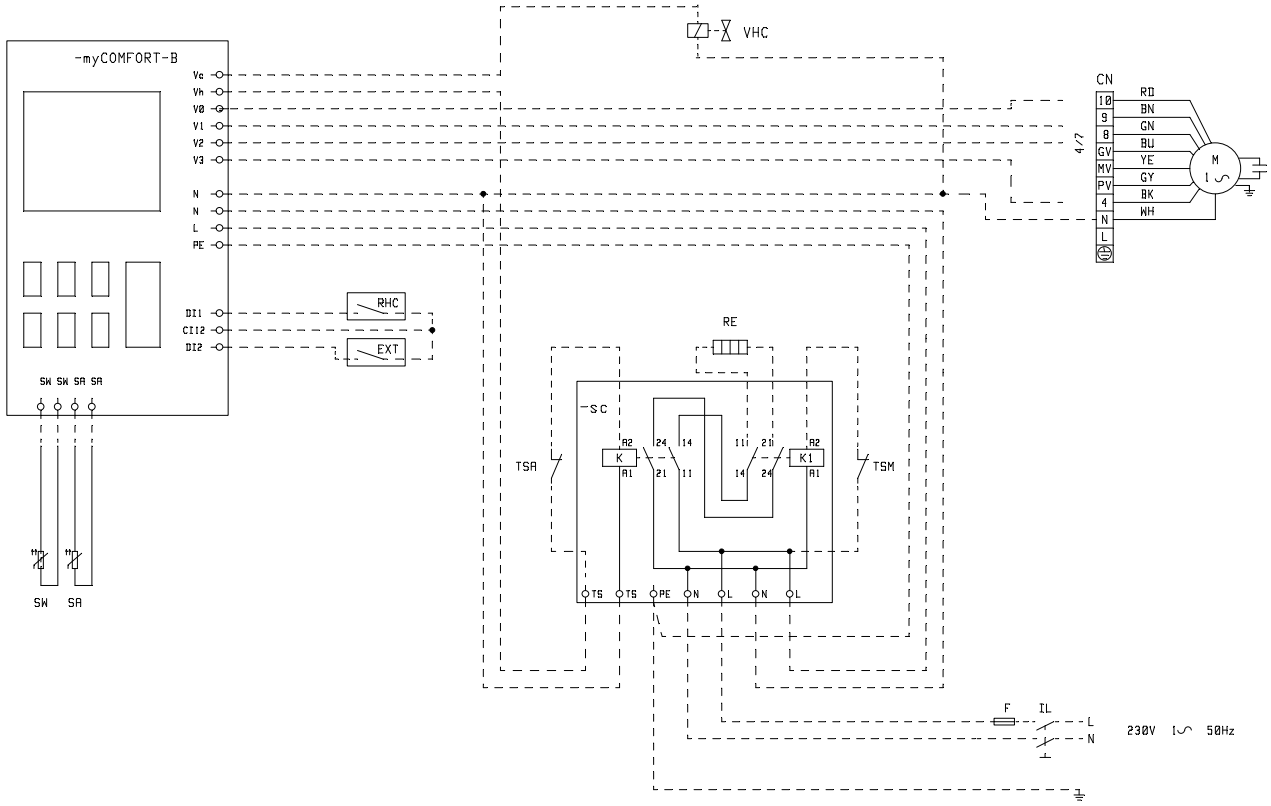

WH(M): Bianco = neutro
BK(M): Black
GY(M): Grey
YE(M): Yellow
BU(M): Blue
GN(M): Green
BN(M): Brown
RD : Red
WH(VC/H): White = valve actuator neutral

» MCB V + RE DM 6

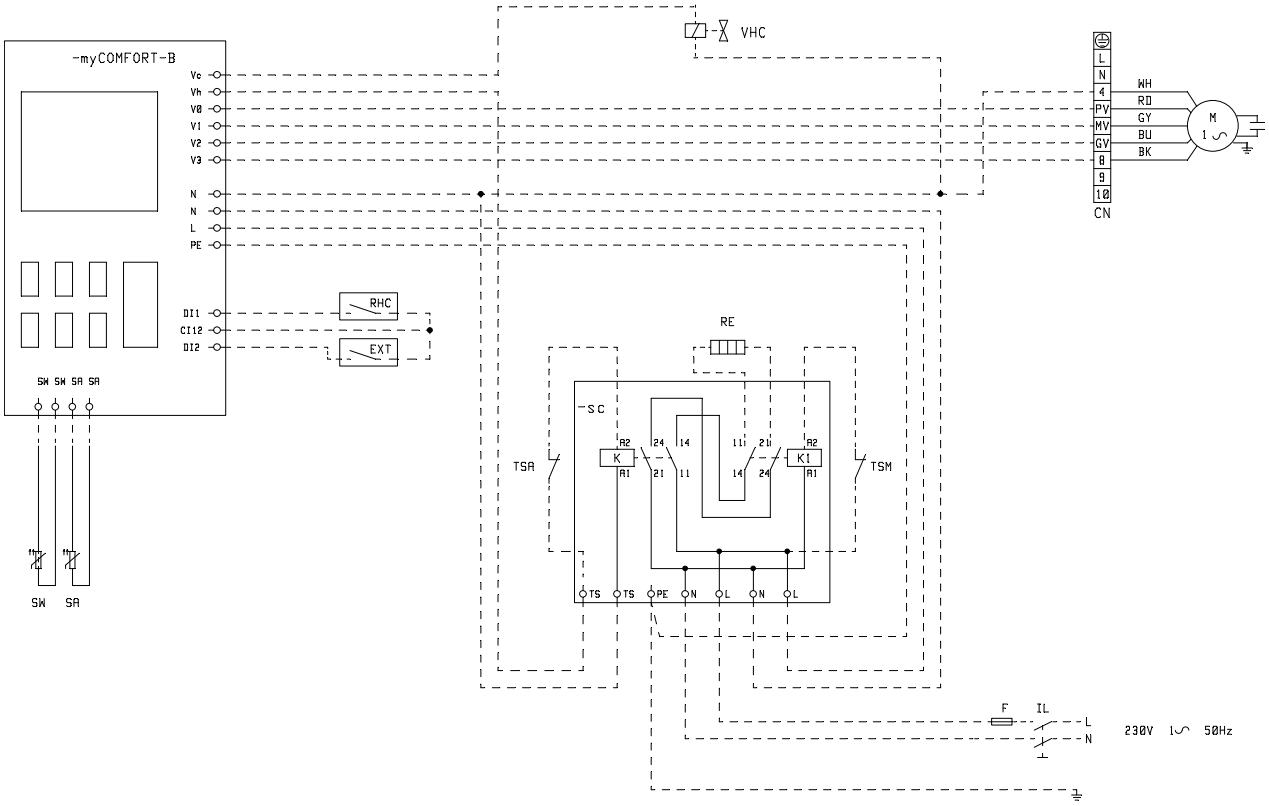

WH(M): White = Neutral
BK(M): Black
BU(M): Blue
GY(M): Grey
RD : Red
WH(VC/H): White = valve actuator neutral

» MCM/MCL V DM 1

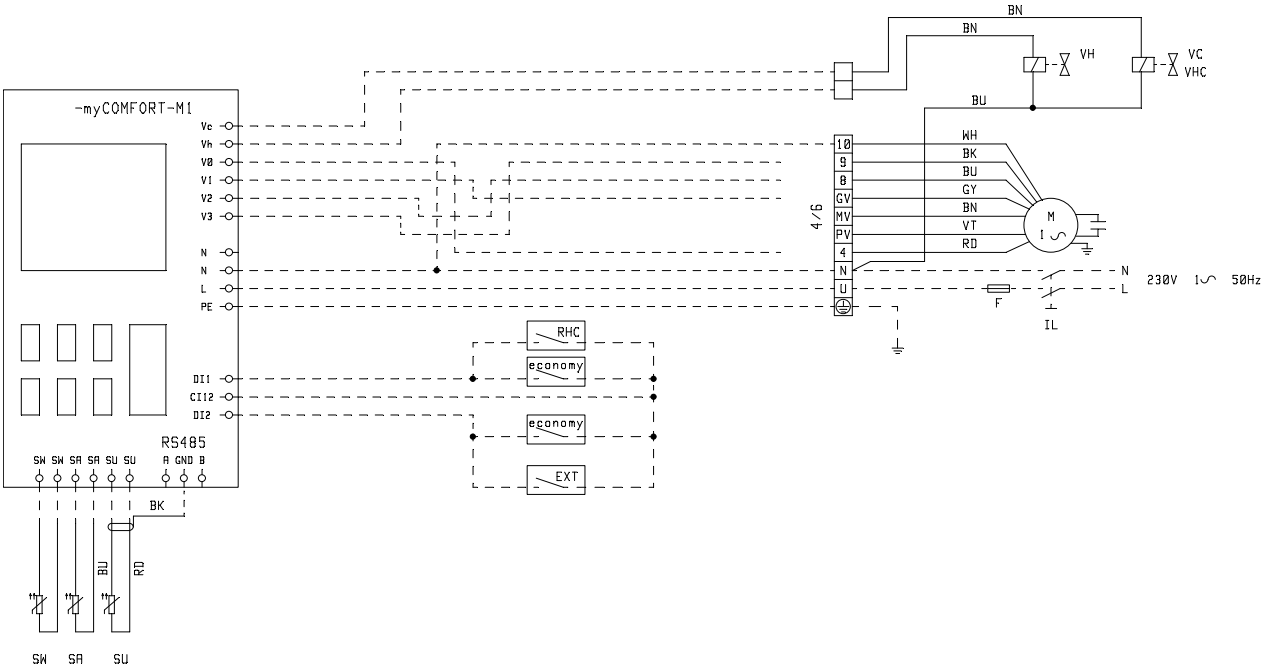

WH(M): White = Neutral
BK(M): Black
BU(M): Blue
GY(M): Grey
BN(M): Brown
VT(M): Purple
RD : Red
BN (VC/H): Brown = valve actuator line
BU (VC/H): Blue = valve actuator neutral

» MCM/MCL V DM 2-5

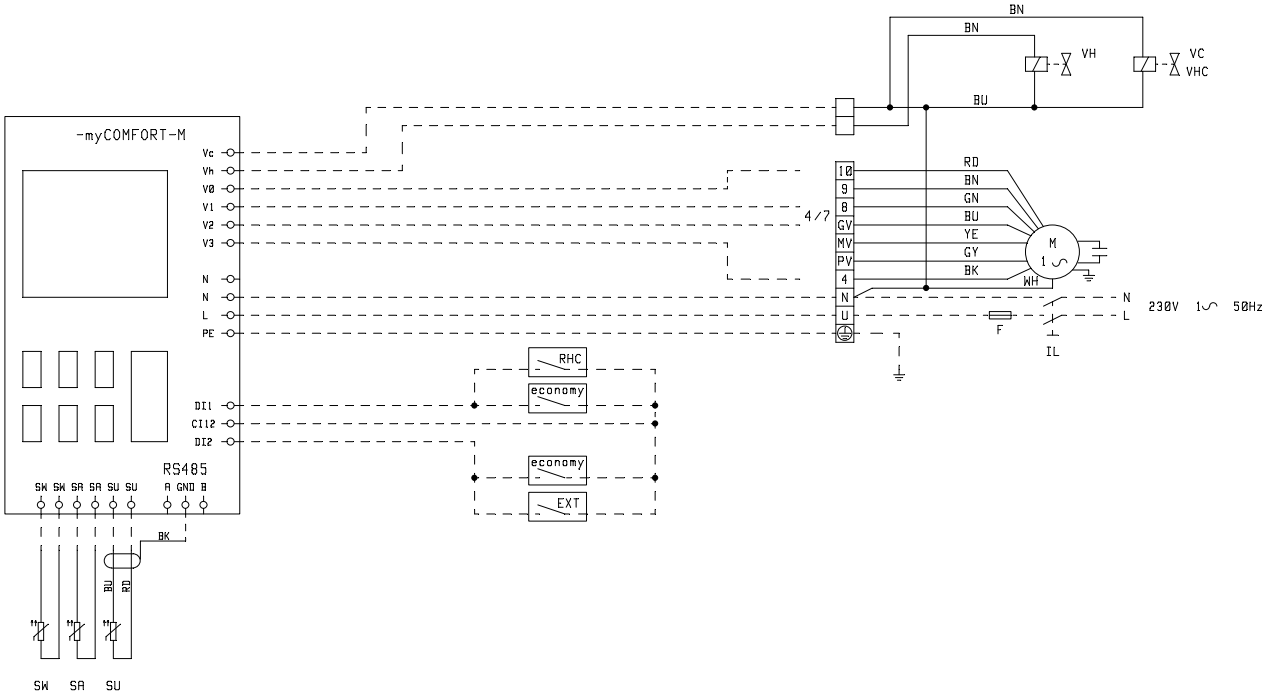

WH(M): White = Neutral
BK(M): Black
GY(M): Grey
YE(M): Yellow
BU(M): Blue
GN(M): Green
BN(M): Brown
RD : Red
BN (VC/H): Brown = valve actuator line
BU (VC/H): Blue = valve actuator neutral

» MCM/MCL V DM 6

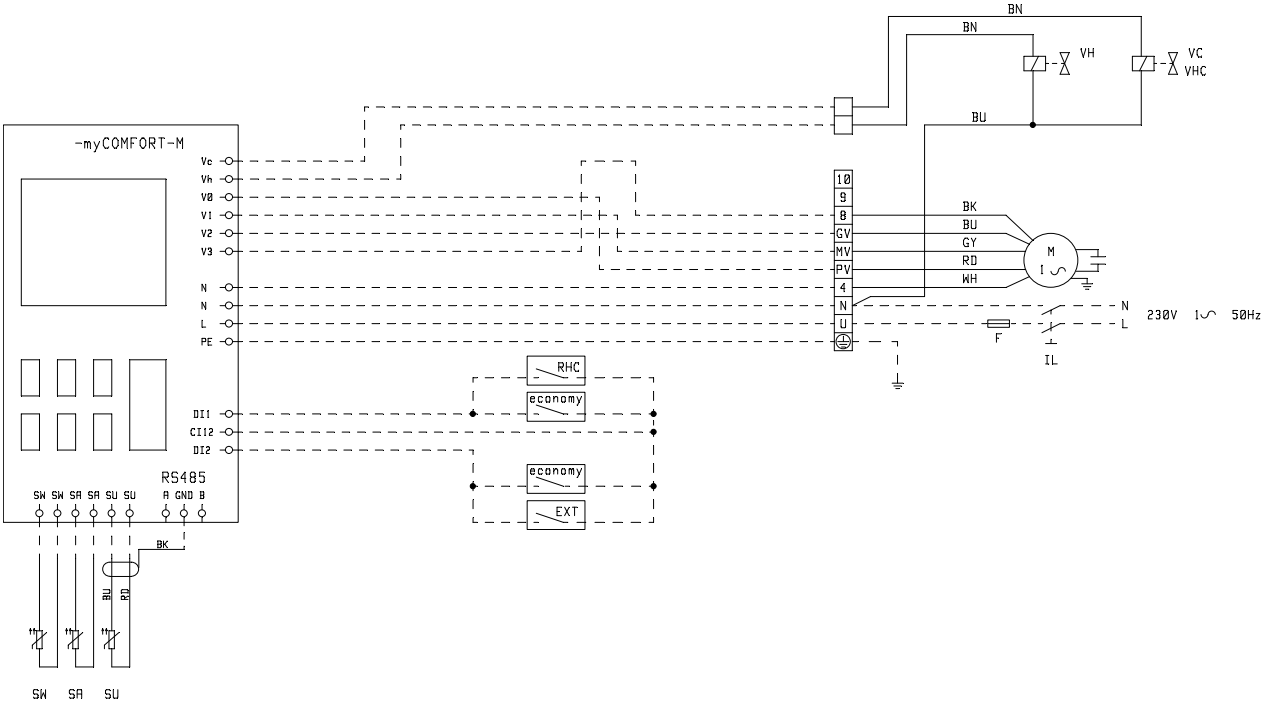

WH(M): White = Neutral
BK(M): Black
BU(M): Blue
GY(M): Grey
RD : Red
BN (VC/H): Brown = valve actuator line
BU (VC/H): Blue = valve actuator neutral

» MCM/MCL V+RE DM 1

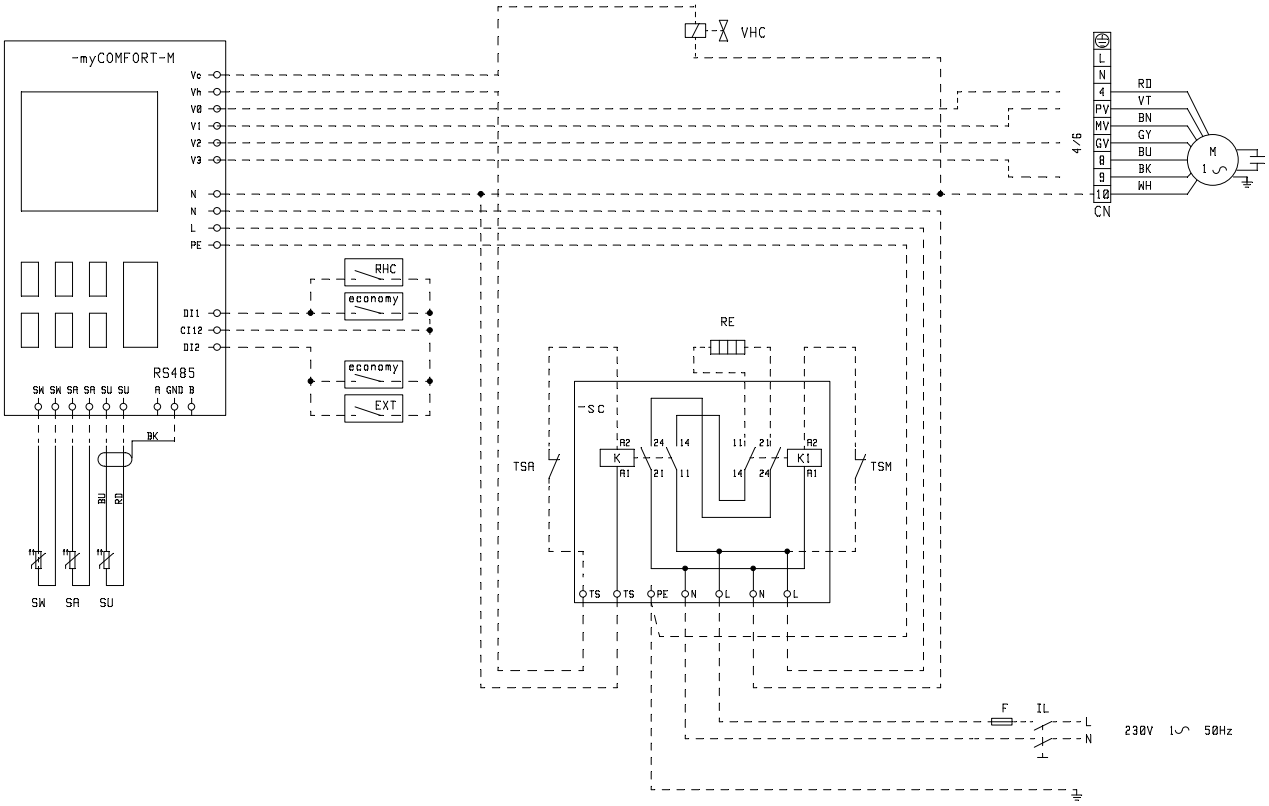

WH(M): White = Neutral
BK(M): Black
BU(M): Blue
GY(M): Grey
BN(M): Brown
VT(M): Purple
RD : Red
BN (VC/H): Brown = valve actuator line
BU (VC/H): Blue = valve actuator neutral

» MCM/MCL V+RE DM 2-5

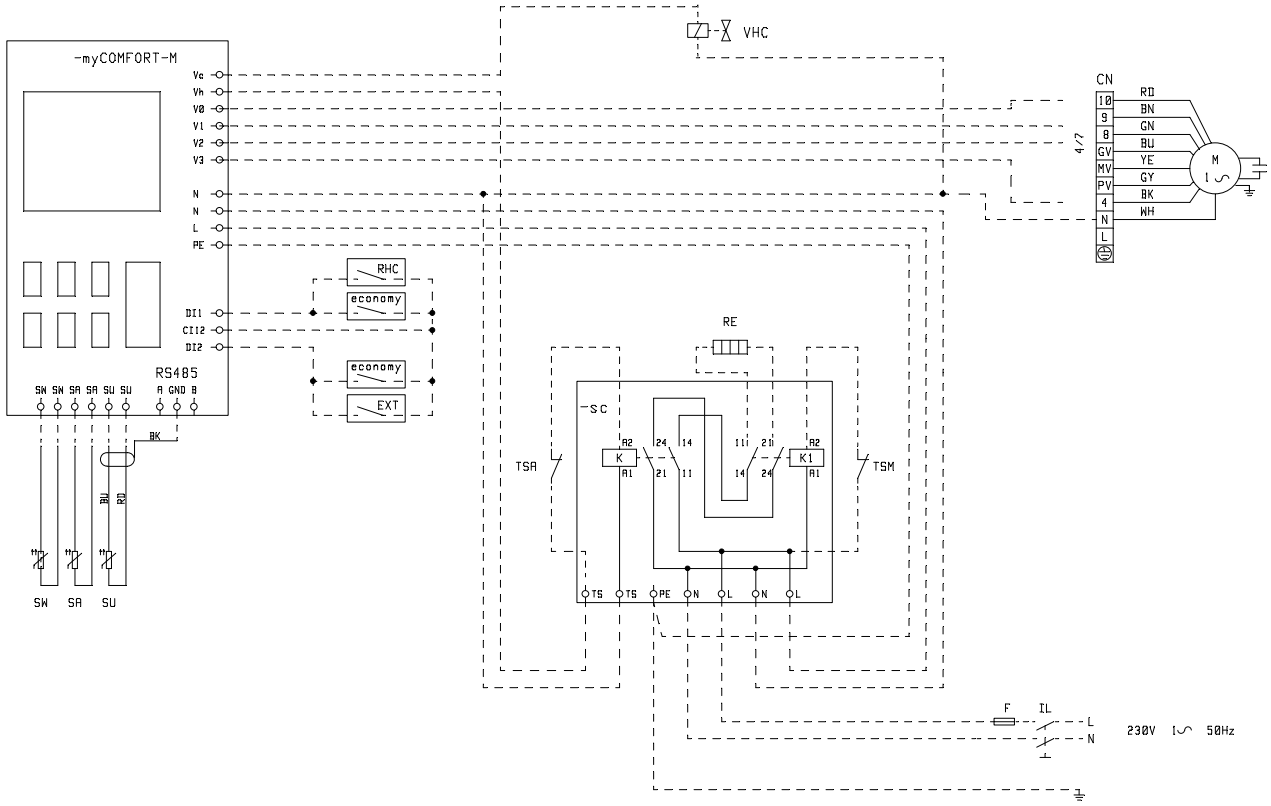

WH(M): White = Neutral
BK(M): Black
GY(M): Grey
YE(M): Yellow
BU(M): Blue
GN(M): Green
BN(M): Brown
RD : Red
BN (VC/H): Brown = valve actuator line
BU (VC/H): Blue = valve actuator neutral

» MCM/MCL V+RE DM 6

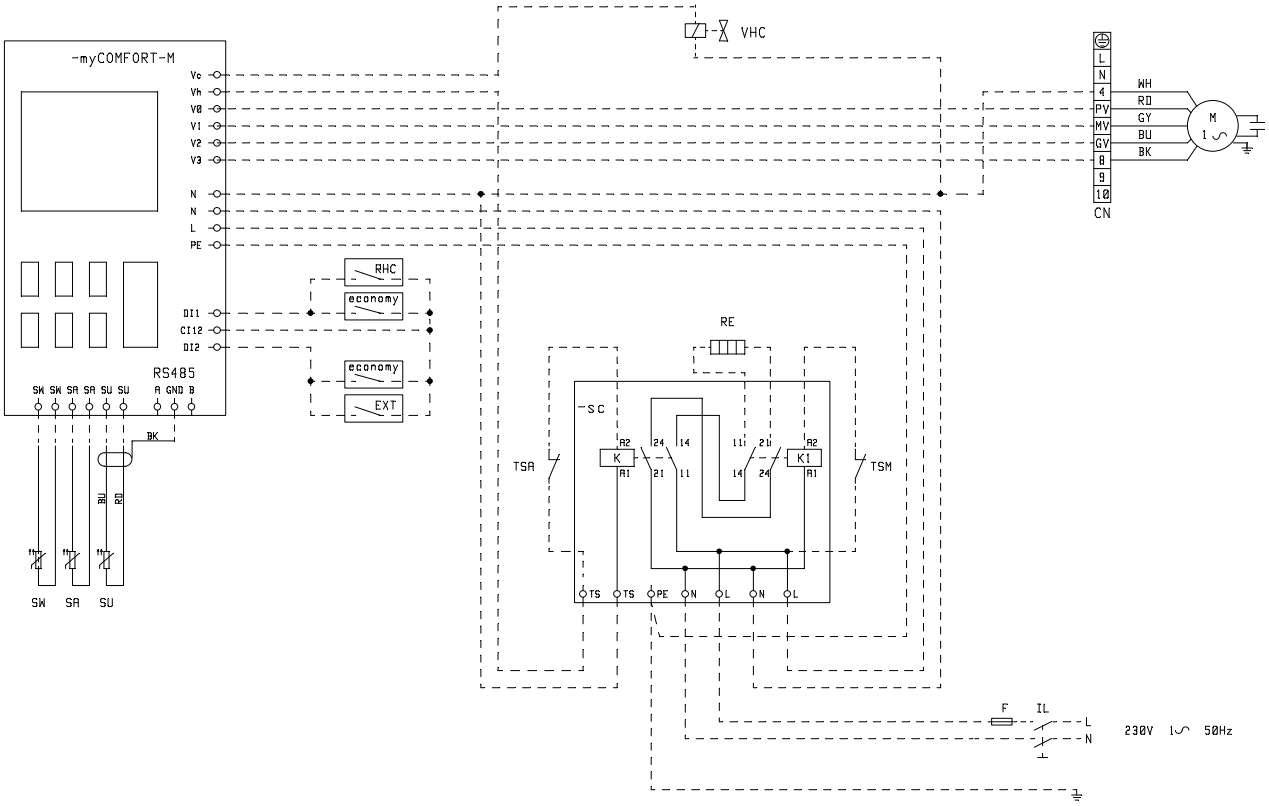

WH(M): White = Neutral
BK(M): Black
BU(M): Blue
GY(M): Grey
RD : Red
BN (VC/H): Brown = valve actuator line
BU (VC/H): Blue = valve actuator neutral

» DM 1 TED2T

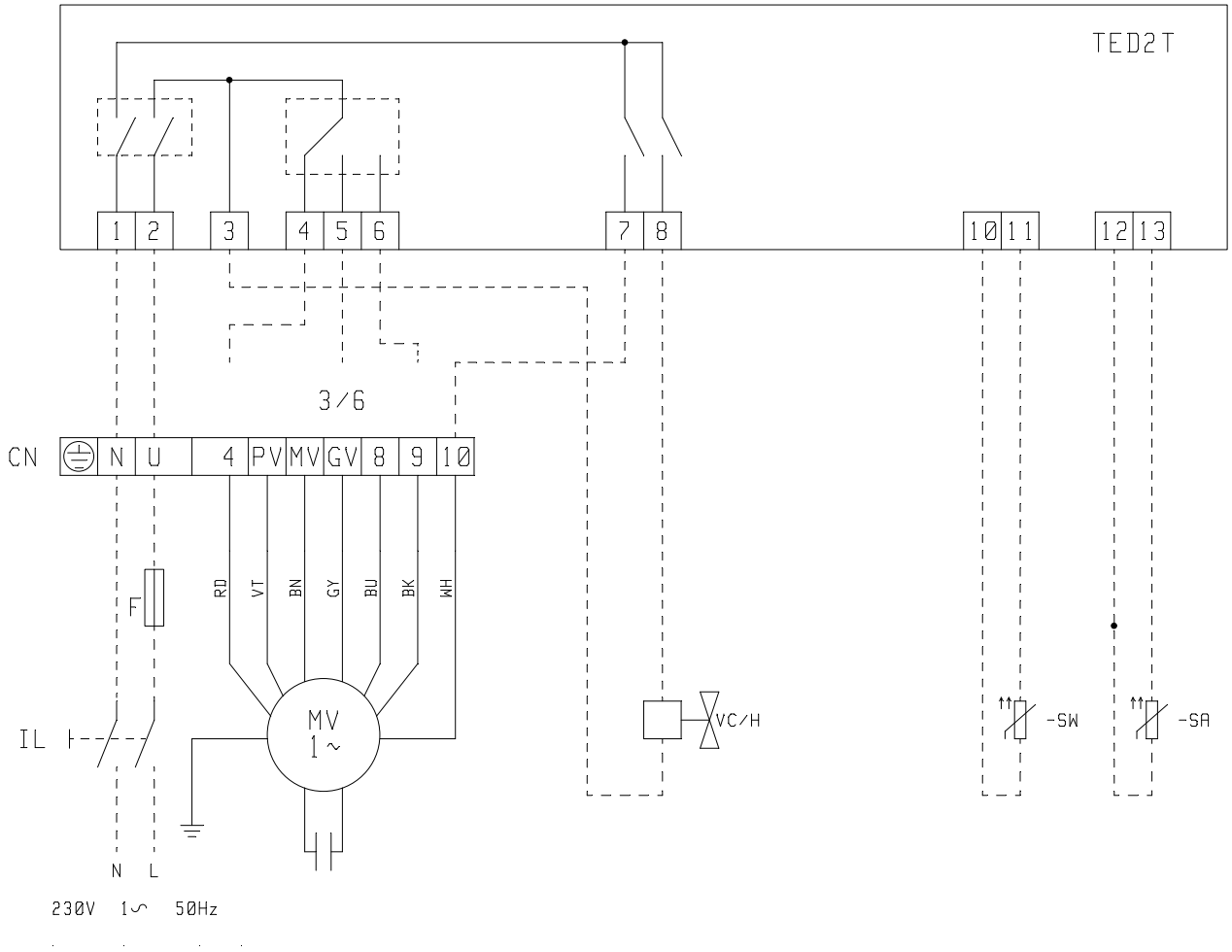

WH(M): White = Neutral
BK(M): Black
BU(M): Blue
GY(M): Grey
BN(M): Brown

VT(M): Purple
RD : Red
BN (VC/H): Brown = valve actuator line
BU (VC/H): Blue = valve actuator neutral

» DM 2-5 TED2T

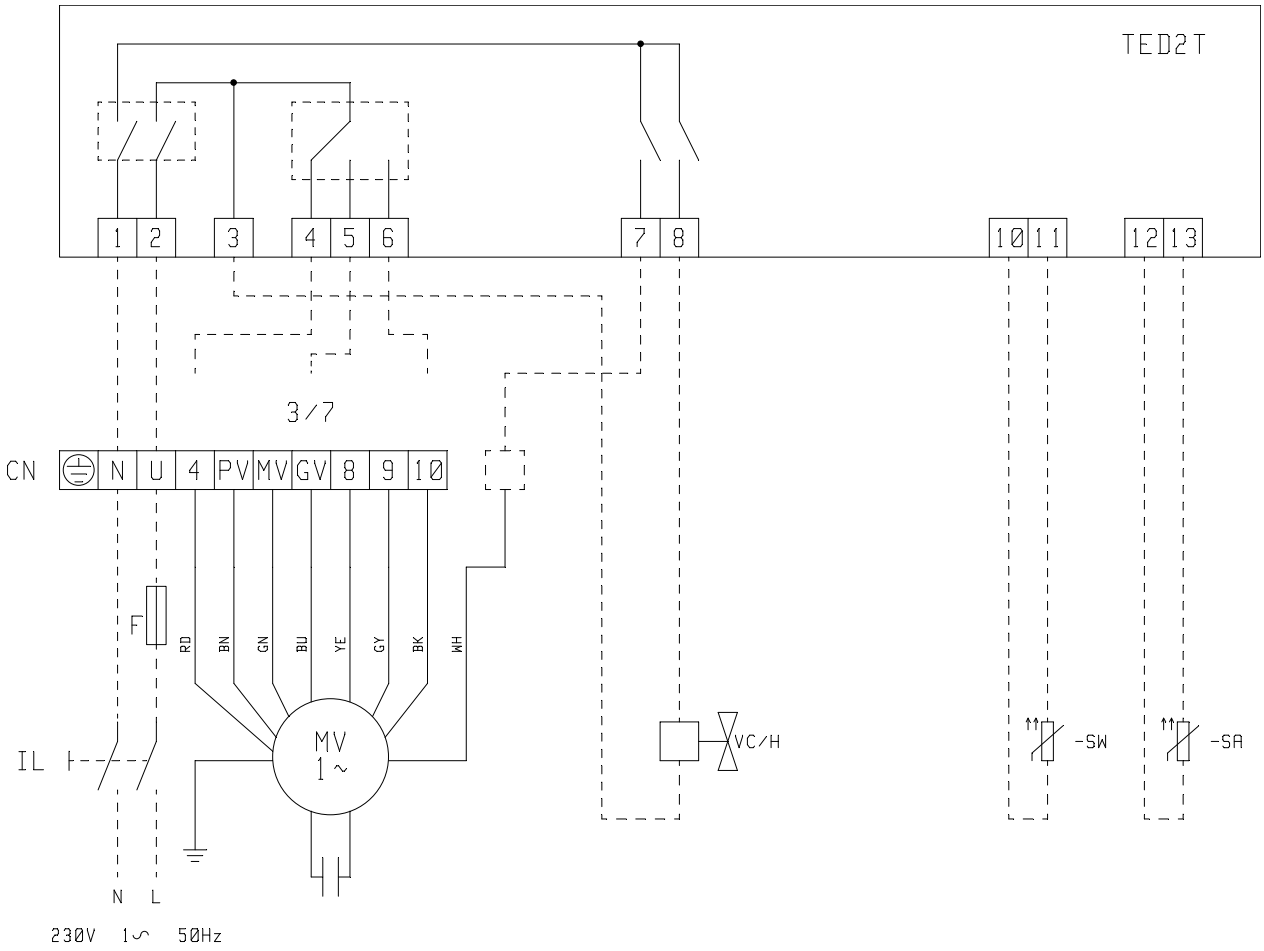

WH(M): White = Neutral
BK(M): Black
GY(M): Grey
YE(M): Yellow
BU(M): Blue

GN(M): Green
BN(M): Brown
RD : Red
BN (VC/H): Brown = valve actuator line
BU (VC/H): Blue = valve actuator neutral

» DM 6 TED2T

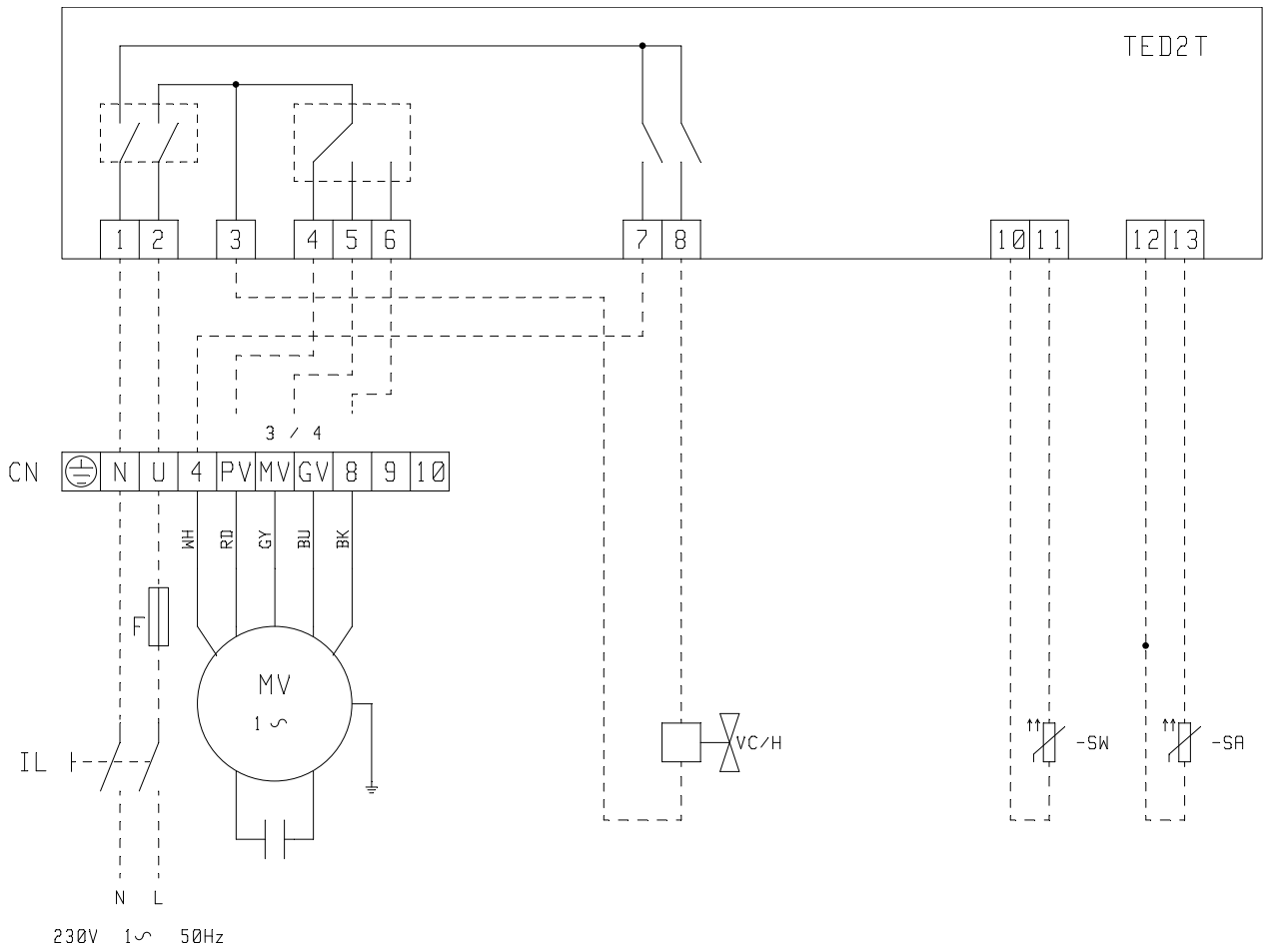

WH(M): White = Neutral
BK(M): Black
GY(M): Grey
BU(M): Blue

RD : Red
BN (VC/H): Brown = valve actuator line
BU (VC/H): Blue = valve actuator neutral

» DM 1 TED4T

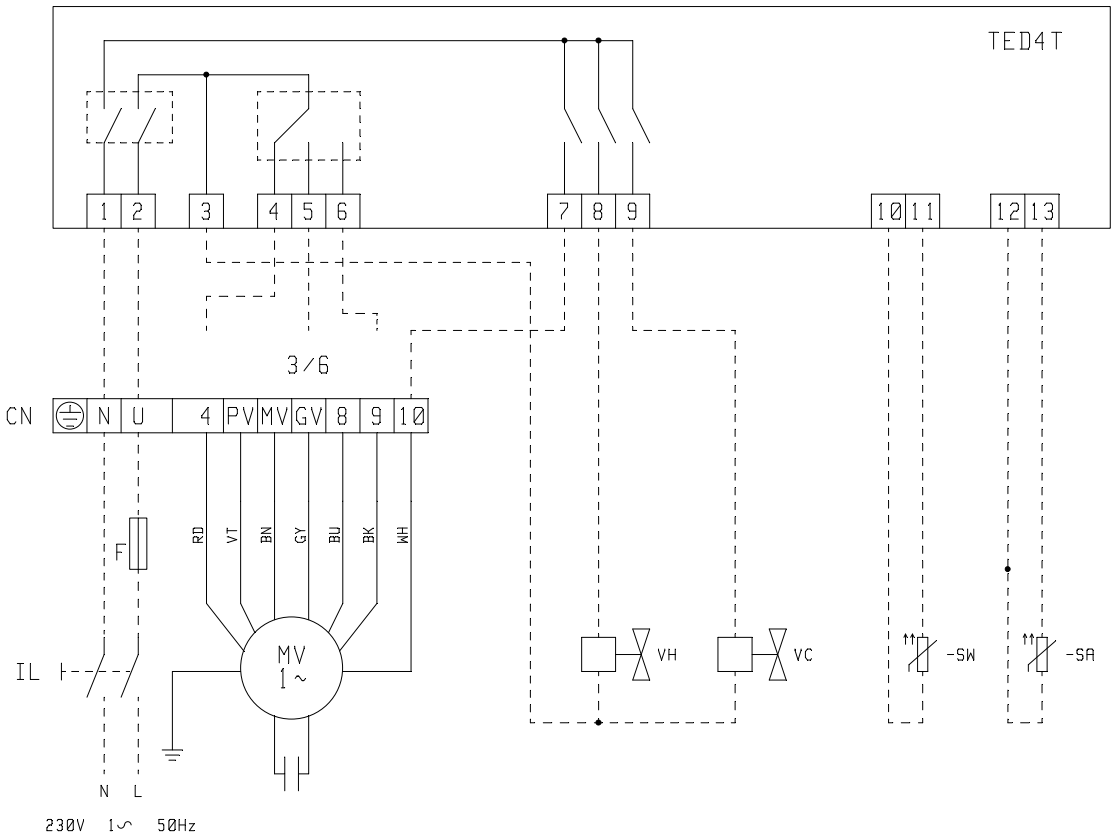

WH(M): White = Neutral
BK(M): Black
BU(M): Blue
GY(M): Grey
BN(M): Brown

VT(M): Purple
RD : Red
BN (VC/H): Brown = valve actuator line
BU (VC/H): Blue = valve actuator neutral

» DM 2-5 TED4T

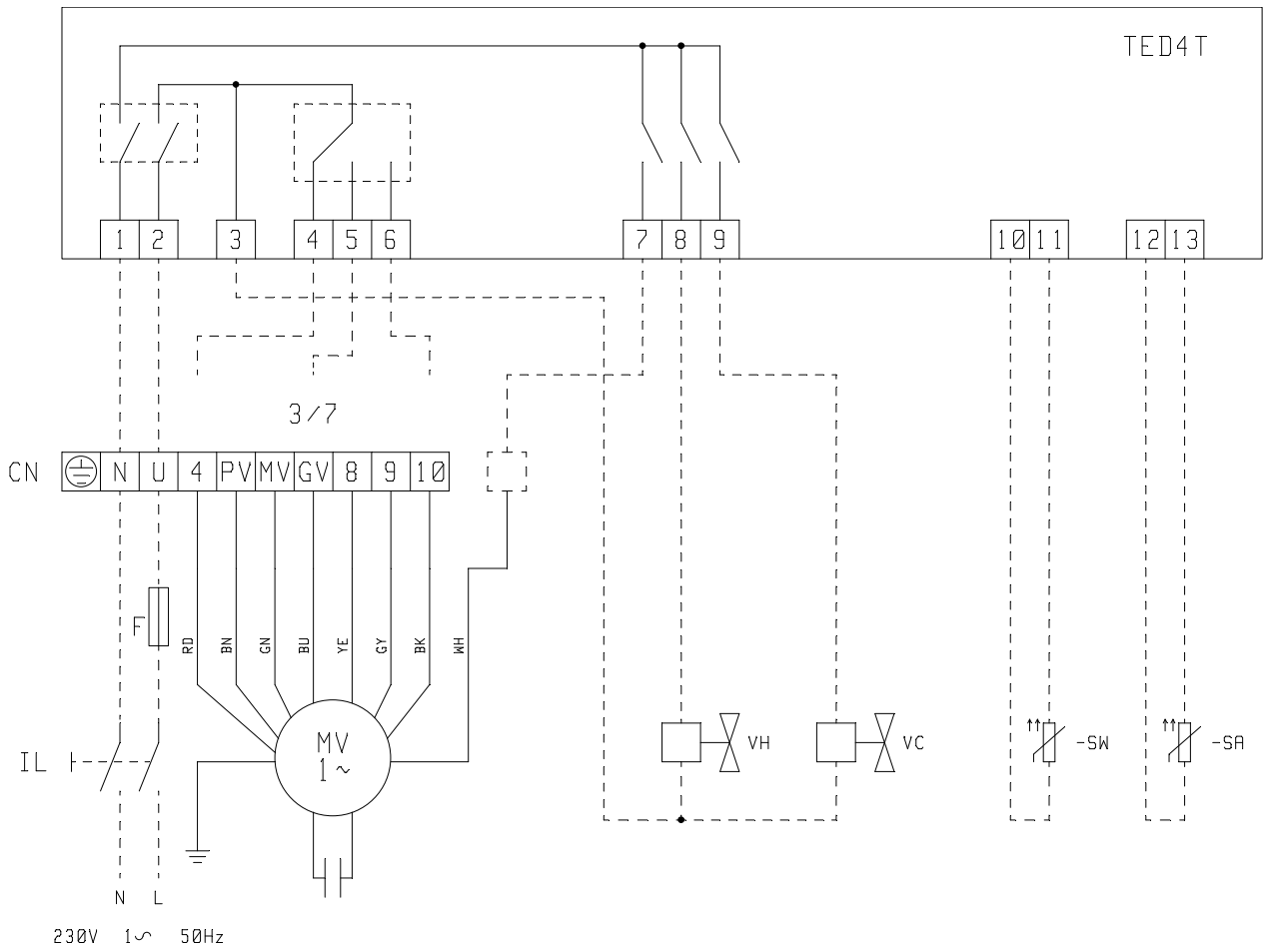

WH(M): White = Neutral
BK(M): Black
GY(M): Grey
YE(M): Yellow
BU(M): Blue

GN(M): Green
BN(M): Brown
RD : Red
BN (VC/H): Brown = valve actuator line
BU (VC/H): Blue = valve actuator neutral

» DM 6 TED4T

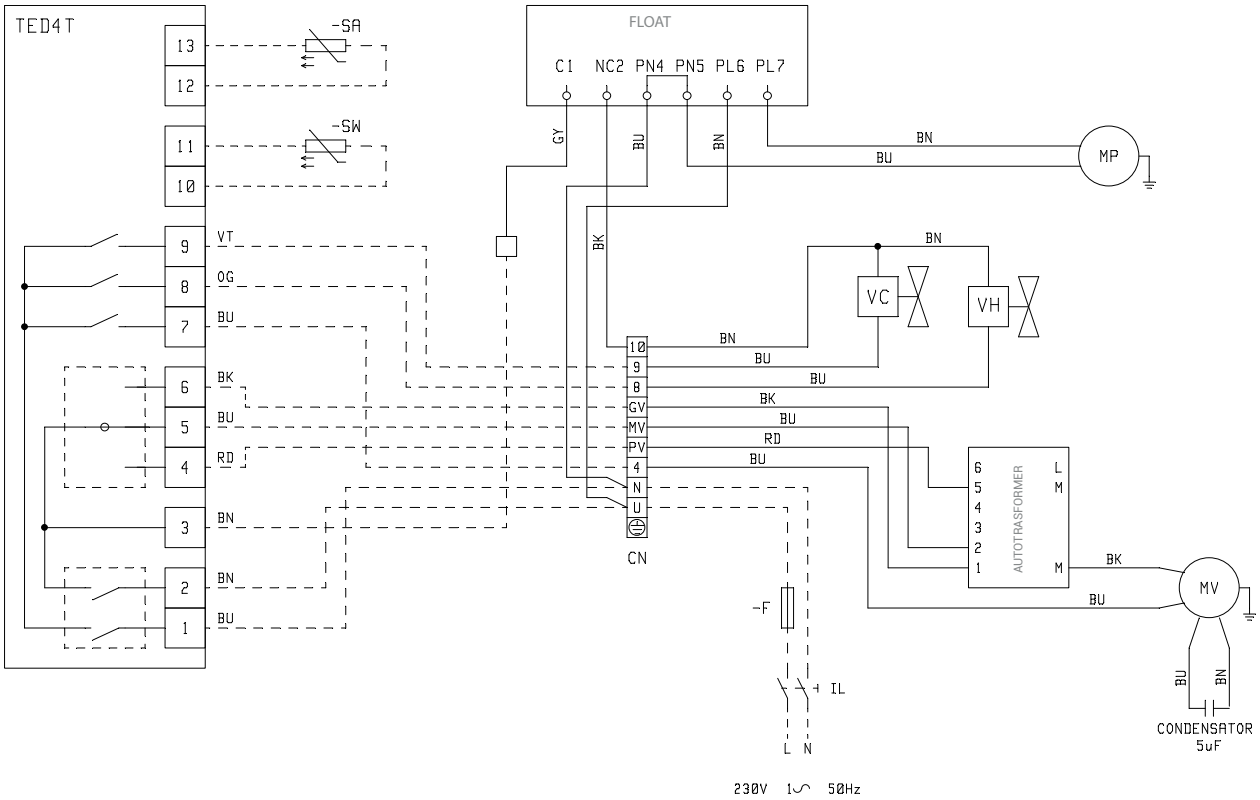

WH(M): White = Neutral
BK(M): Black
GY(M): Grey
BU(M): Blue

RD : Red
BN (VC/H): Brown = valve actuator line
BU (VC/H): Blue = valve actuator neutral

» EVO AC

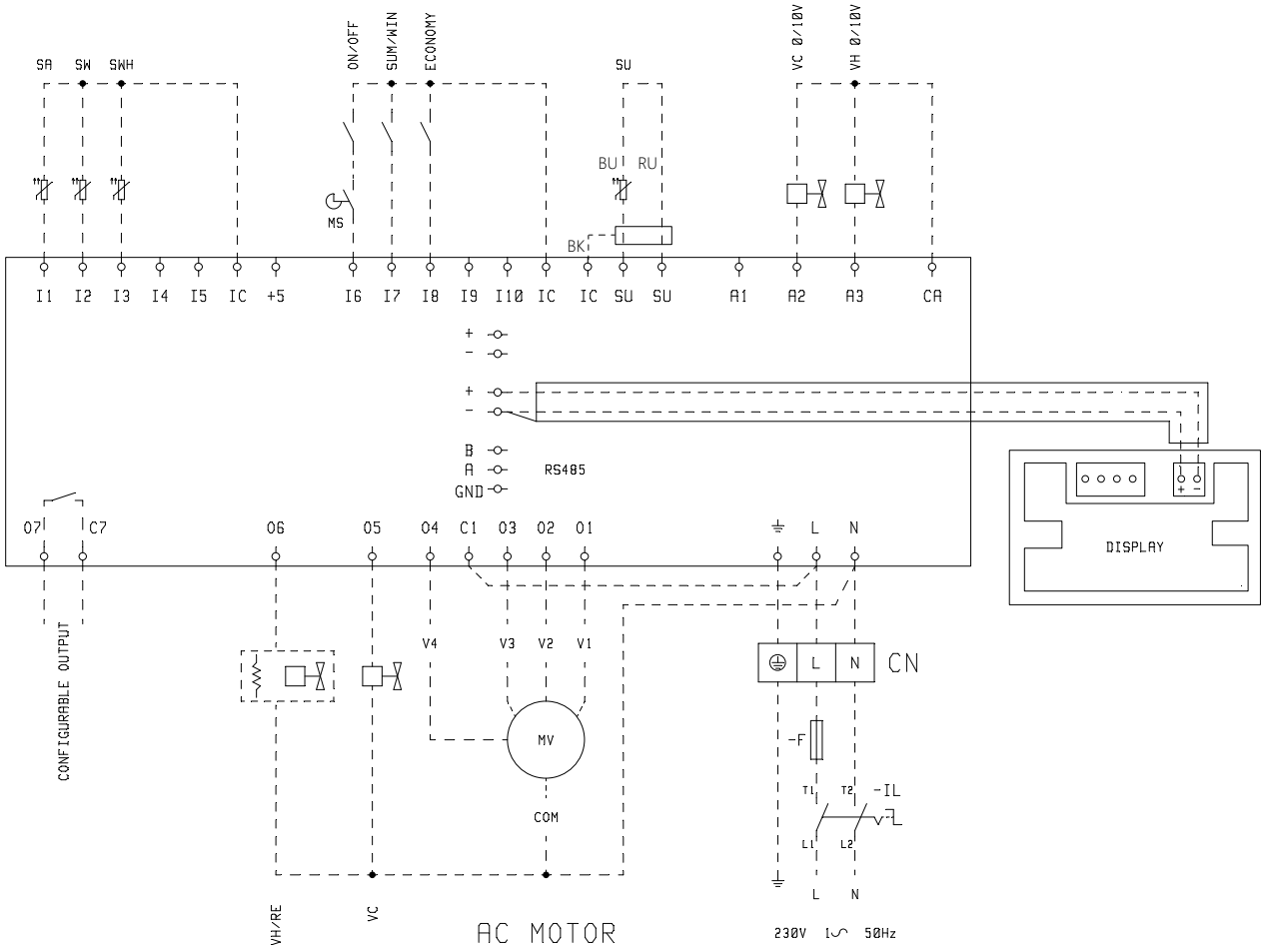

V4(M): Speed
V3(M): Motor maximum speed
V2(M): Motor medium speed
V1(M): Motor minumum speed
SWH: Hot water temperature probe (only 4-pipe units)
BU(M): Blue= common
BN (FLOAT): Brown=pump power supply line
BU (FLOAT):Blue = pump power supply neutral
BK (FLOAT): Black = float switch alarm signal
GY (FLOAT): Grey = COM alarm
SUM/WIN: No-voltage contact for remote ECONOMY
VC 0/10V: Water valve (cold, for 4-pipe hydronic indoor unit) modulating 0/10V
VH 0/10V: Water valve (hot, only for 4-pipe hydronic indoor unit)
COM: ON/OFF common outputs
VC: Hot water valve (only 4-pipe hydronic indoor unit)
VH/RE: Hot water valve (only 4-pipe hydronic indoor unit) or heating element

14 ACCESSORIES

E2TY - 2.8" touch screen user interface
Touch screen 2.8" user panel for EVO-2-TOUCH control EVO, frame in natural brushed aluminium. (to combined with EVO BOARD)
Main functions:
- 2.8'' capacitive touch screen display
- Integrated temperature and humidity probe
- Low-voltage power supply drawn from the power component
- Wall mounted
- Designed for the main electrical connection boxes
- User-friendly
- Aluminium foil and polyethylene frame with various chrome plating options

E2TK - 2.8" touch screen user interface
Touch screen 2.8" user panel for EVO-2-TOUCH control EVO, frame in aluminium color black RAL9005. (to combined with EVO BOARD)
Main functions:
- 2.8'' capacitive touch screen display
- Integrated temperature and humidity probe
- Low-voltage power supply drawn from the power component
- Wall mounted
- Designed for the main electrical connection boxes
- User-friendly
- Aluminium foil and polyethylene frame with various chrome plating options

TC - fan stop thermostat: elecromechanical thermostat for minimum water temperature during heating
Fan stop thermostat with automatic resetting, it stops the fan motor assembly when the water temperature in the heat exchanger decreases under the set value (42°C). Usefull only in the heating mode for installation on the finned pack of the heat exchanger.

KP - power interface for connection of up to 4 units to a single control panel
The KP master sleeve can be installed to control with a single control panel up to 4 units (connected in parallel).
This accessory is designed for installation on a DIN drive, usually placed on electric board, can be matched with all DUCTIMAX versions.

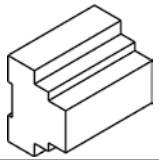

MYCOMFORT BASE - GALLETTI wall-mounted microprocessor control, model MYCOMFORT BASE,
having the following main features:
- Room air temperature reading and adjustment
- Water temperature reading (water probe as an optional)
- Manual and automatic adjustment of fan speed
- Manual and automatic switching of heating and cooling mode depending on the water temperature within the heat exchanger or on the room temperature, with a neutral zone that can be selected in the range from 2° to 5°C.

The controller is equipped with a large display (3") to show and set all the functions of the unit.

MYCOMFORT MEDIUM - wall-mounted microprocessor control
having the following main features:
- Room air temperature reading and adjustment
- Room humidity reading and adjustment
- Water temperature reading (water probe as an optional)
- Manual and automatic adjustment of fan speed
- Manual and automatic switching of heating and cooling mode depending on the water temperature within the heat exchanger or on the room temperature, with a neutral zone that can be selected in the range from 2° to 5°C.
- Serial port for Bus connection

The controller is equipped with a large display (3") to show and set all the functions of the unit.

MYCOMFORT LARGE - wall-mounted microprocessor control
having the following main features:
- Room air temperature reading and adjustment
- Room humidity reading and adjustment
- Water temperature reading (water probe as an optional)
- Manual and automatic adjustment of fan speed
- Manual and automatic switching of heating and cooling mode depending on the water temperature within the heat exchanger or on the room temperature, with a neutral zone that can be selected in the range from 2° to 5°C.
- Clock and hourly timer-programmed operation
- 2 Analogue outputs for controlling modulating evices -10V
- 2 Digital outputs for controlling (On/Off) external devices (novoltage contacts)
- Serial port for Bus connection

The controller is equipped with a large display (3") to show and set all the functions of the unit.

DIST - MYCOMFORT controller spacer for wall mounting
ABS wall mounting support to separate the MYCOMFORT controllers from the wall.

EVO - wall-mounted microprocessor split controller with display

EVO controller is a system composed of:

- Circuit board comprising the power circuit, the microprocessor system and the removable screw connectors for the connection of the inlet and outlet devices;
- User interface comprising a graphic display and a keyboard (six keys) provided with clock and sensor to read the ambient temperature.

Main functions:

- Room air temperature reading and adjustment
- Room humidity reading and adjustment
- Water temperature reading (water sensor as an optional)
- Manual/automatic regulation of the fan speed with ON -OFF step and modulating control
- Automatic adjustment of valve opening with ON/OFF and modulating controller
- Manual and automatic switching of heating and cooling mode depending on the water temperature within the heat exchanger or on the room temperature, with a selectable neutral zone
- Clock and hourly timer-programmed operation
- 3 Analogue outputs for controlling modulating evices -10V
- E conomy function and minimum temperature
- 1 Digital outputs for controlling (On/Off) external devices (novoltage contacts)
- Serial port for RS485 connection
- Serial port for OC connection
- 3 digital inputs for ON-OFF, Economy, Operating mode remote setting

Operating mode

The controller is provided with a programmable display that allows you to view and set the hydronic unit functions by means of the specific interface with parameter description.

LED503 - Recess wall-mounted microprocessor control

The proposed microprocessor control panels for Galletti indoor units is completed by the LED503 command with LED display that is designed for recess wall mounting.

CONTROLLER

The control software developed by the Galletti Software Dept., features:

- Manual fan speed selection
- Automatic selection of fan speed according to the difference between the set temperature and the room air temperature
- Manual selection of heating/cooling operating mode;
- automatic selection of heating/cooling operating mode;
- Control of 1 or 2 ON/OFF valves;
- Control of additional heating element;
- on board timer function to detect the actual ambient air temperature;
- Reading of air ambient temperature, set point, fan speed and mode selection on the LED display.

C0 (W-G-B) - plate for LED503, white W (RAL 9003), grey G (RAL 7031), black B (RAL 9005)

Covering plates available in three colours matching the 503 connectors.

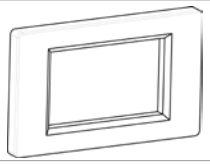

MCSWE - water temperature sensor for microprocessor controls model EVO, MYCOMFORT

Directly connected to the microprocessor controllers EVO and MYCOMFORT to measure the water temperature through the heat exchanger.

If the temperature registered is lower than 17 °C the unit works in cooling mode and the temperature range of the control panel will be referred to the cooling mode (19/31 °C); if the temperature registered is higher than 37 °C the unit works in heating mode and the temperature range of the control panel will be referred to the heating mode (14/26 °C). If the temperature registered is between 17 °C e 37 °C the control panel will disable the unit operation.

MCSUE - Humidity sensor for EVO and MYCOMFORT microprocessor controller

Directly connected to the microprocessor controllers EVO and MYCOMFORT, it enables the control of the heating element ventilation (if present, as support in heating mode) and the automatic cooling/heating changeover according to the water temperature.

PMA / PMAC - plenum for the connection to flexible dutcs

PMAD e PMACD (insulated) plenums are used to connect to air distribution plants achieved by means of hoses or to other dedicated accessories. They can be installed on both the intake and delivery line (in this case the hose should be insulated). The spigot diameter is Ø 200 mm.

DUCTIMAX 1-2: number of outlets 2

DUCTIMAX 3-4: number of outlets 3

DUCTIMAX 5-6: number of outlets 3

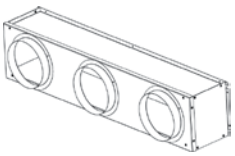

PAF - Front air intake plenum Ø200

Thanks to the accessories " PMA outlet plenum" and " PAF front intake plenum " it is possible to include DM in installations where it is necessary to have the air outlet and inlet on a single side, thus considerably reducing the required space. The air intake is equipped with Ø 200 collars

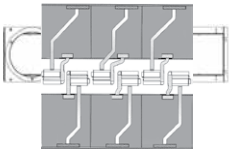

RD / RDC - Suction/delivery straight connection

Are used to connect the unit DUCTIMAX to rectangular air distribution ducts or directly to GM and GA air outlet and intake grilles

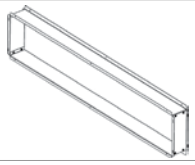

R90/R90C - 90° connection for intake/ delivery
Can be installed on both the air inlet and outlet (in the R90C internally insulated version), the 90° fittings can be installed directly on the units. DUCTIMAX.

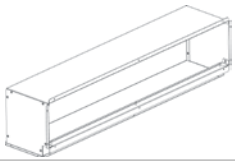

MAFO - Air intake modules with filter
Made of galvanized steel sheet, these modules permit to filter the air sucked up by the unit and also to connect the unit to the intake channeling.
MAFOD: air intake module with corrugated filter made of acrylic fiber, selfextinguishing in class 1, with filtering class G4.
The filter may be inserted or removed and is fixed by means of 2 knobs with 4 MA threaded stems.
The filtering material may be washed and regenerated to maintain the rated filtering efficiency with limited charge leaks.
The accessory kit comprises
- Load-bearing structure made of galvanized steel sheet.
- Removable a bucket-type filter.
- Self-tapping fixing screws.

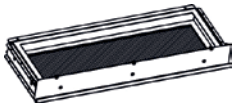

TFA - Not insulated flexible ducts
Uninsulated flexible duct for the connections to the air distribution with Ø 200 mm diameter, supplied in 6 m lenght undivisible.

TFM - Insulated flexible ducts
Insulated flexible duct for the connections to the air distribution with Ø 200 mm diameter, supplied in 6 m lenght undivisible. The insulation of the duct is optained by means of fiberglass, thickness 25 mm with 16 kg/m^3 density.

TP- Plastic cap
Plastic cap Ø 200 mm for the closing on the PCOF, of the air outlet not used.

CA/CAF- - air inlet plenum box
Intake Plenum box in galvanised sheet metal complete with circular collars (Ø 200 mm) for the connection, by means of hoses and intake grids with fixed fins, to pocket type structures, to increase the free air flow cross section. Sized to be adaptable to the modular structure of the ceiling panels, they are equipped with 2 or 3 circular collars so that they can be connected, following their suitable combination, to all the DUCTIMAX units. The CA version is equipped with just the grid alone whereas the CAF version is also equipped with a flat filter in acrylic material, with filtering rating G2, housed in the standard frame. The filter of this second type of intake box can be serviced (cleaned) on a periodic basis without having to access the unit fitted behind the ceiling panels or in a service room.

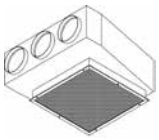

CM - Delivery plenum boxes
Delivery Plenum boxes in galvanised sheet metal complete with circular collars (Ø 200 mm, for the connection by means of hoses) and adjustable delivery grids. The boxes are duly insulated externally with calorized foam polyethylene in order to prevent the formation of condensate during the cooling cycle. Sized to be adaptable to the modular structure of the ceiling panels, they are equipped with 1, 2 or 3 circular collars so that they can be connected, following their suitable combination, to all the heater fans of the DUCTIMAX range. All versions are equipped with adjustable fins to optimise the distribution of the conditioned air.

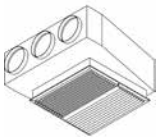

GM - Alluminium air outlet grille
Anodized aluminium air intake grille with 2-row swinging fins, complete with galvanized sheet steel frame for mounting on the wall or directly on the air outlet of the unit. The galvanized steel sheet frame has slots, at one end, for direct mounting on the air outlet of the thermal ventilating unit.

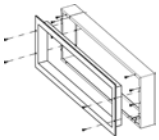

GA - Alluminium air inlet grille
Air intake grids with single row of fins in anodised aluminium, equipped with galvanised sheet metal frame that is used to wall-mount the grids or to fit them directly on the intake head of the machine. The galvanised sheet metal frame is drilled at one end so that it can be secured directly to the intake head of the unit complete with RD connection.

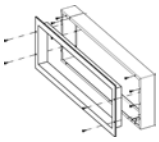

VK - ON-OFF 3-way motor driven valve with hydraulic kit
It controls the room temperature by stopping the water flow through the heat exchanger. The kit, available for all models with standard heat exchanger or additional DF heat exchanger, comprises the following components: Valve body: 3-way with incorporated by-pass (4 connections), 230V single-phase electro-thermal normally closed ON/OFF servo control, it acts directly on the valve shutter. Hydraulic plumbing kit made with copper piping and brass connectors.

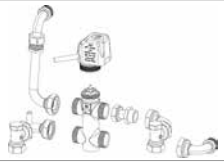

VKM- 3-way motor-driven modulating valve complete with hydraulic kit
It controls the room temperature by stopping the water flow through the heat exchanger. The kit, available for all models with standard heat exchanger or additional DF heat exchanger, comprises the following components: Valve body: 3-way with incorporated by-pass (4 connections), 24V electro-thermal normally closed modulating servo control. It acts directly on the valve shutter. Hydraulic plumbing kit made with copper piping and brass connectors.

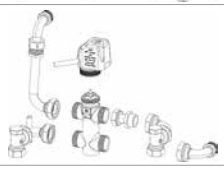

KV - 2-way motor-driven ON/OFF valve complete with hydraulic kit It controls the room temperature by stopping the water flow through the heat exchanger. With 230V electro-thermal actuator. Available for all models, with standard heat exchanger or additional DF heat exchanger.	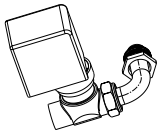
KVM - 2-way motor-driven modulating valve complete with hydraulic kit It controls the room temperature by stopping the water flow through the heat exchanger. With 24 V electro-thermal actuator. Available for all models, with standard heat exchanger or additional DF heat exchanger.	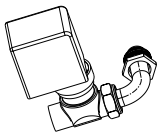
VPIC - 2-way valve - pressure independent ON/OFF with hydraulic kit It controls the room temperature by stopping the water flow through the heat exchanger. With 230V electro-thermal actuator. Available for all models, with standard heat exchanger or additional DF heat exchanger.	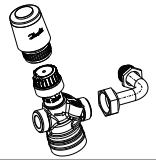
VRC - Auxiliary trays for collecting condensate Used for collecting any condensate that might form on the adjusting valves, the hydraulic unions and the holdfasts during the cooling operating mode. The trays are made of galvanized metal sheet, with condensate discharge pipe (Ø 17 mm) setup for being connected to a flexible rubber tube, like that which has been envisaged for the condensate discharge trays of the basic unit. They are available for: DUCTIMAX units installed horizontally, VRCD.	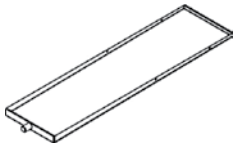
RE - additional electric heating element Useful as heating integration to the hot water system, the RE kit is made of an electric heater with safety thermostat (automatic and manual resetting) and power relay. The additional heating element should be coupled to the control panel. MYCOMFORT (the coupling to other controls is not allowed).	
KSC - Condensate removal kit This device allows to overcome displacements in the condensate drain. The pump can drain water up to 8 l/h and it is completed by a non return valve on the discharge side.	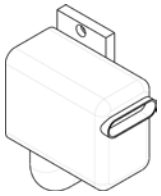
JONIX - mic - Sanitizing module ducted installation with advanced cold plasma technology guarantees bacterial air decontamination. **JONIX - mic - Sanitizing module ducted installation** **JONIX - pic- Sanitizing module installation on plenum**	

15 MAINTENANCE

For safety reasons, before carrying out any maintenance or cleaning jobs, turn off the unit by moving the fan speed selector to "Off" and putting off the main switch (0 position).

⚠ **DANGER!** Due caution must be taken while carrying out maintenance: some metal parts may cause injuries; wear protective gloves.

The maintenance requirements of DUCTIMAX ducted units are limited to periodic cleaning of the air filter and heat exchanger and checks on the efficiency of condensate drainage.

Maintenance may be performed only by specialised personnel.

Whenever starting up the unit after it has not been used for a long time, check that there is no air in the heat exchanger.

The motor requires no maintenance since it has self-lubricating bearings.

15.1 CLEANING THE AIR FILTER

Disconnect the unit from the power supply by setting the main switch on 0 (OFF).

To clean the air filter proceed as follows:

1. Access the unit via the inspection panel and take out the air filter as shown in (Air filter):
2. If the filter is on the inside of the intake grille, remove the latter and then proceed to carry out the steps described below.
3. Clean the filter with warm water or, in the event of dry dust build-up, using compressed air.
4. Allow the filter to dry and then fit it back in place.

» Air filter

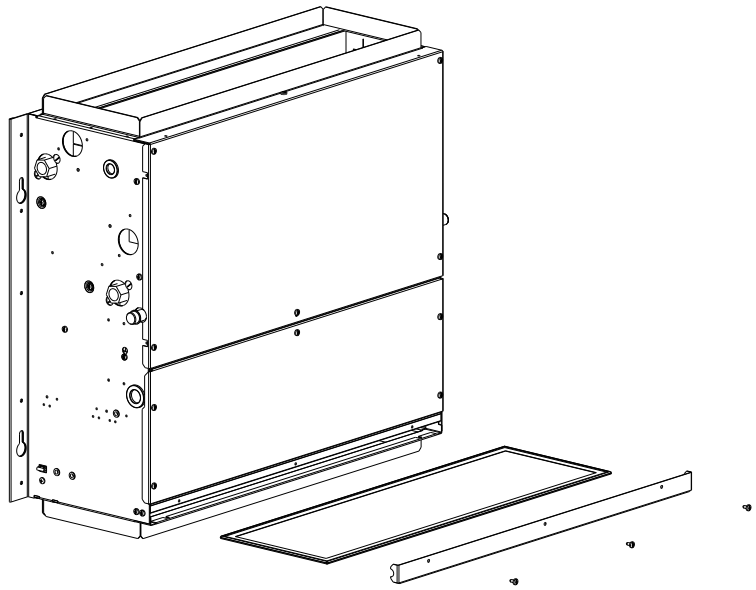

15.2 CLEANING THE HEAT EXCHANGER

It It is advisable to check the condition of the exchanger before the start of every summer season to make sure that the fins are not obstructed by dirt.

To access the heat exchanger, remove the outlet panel (whether of the type with collars or a rectangular flange) and the drip tray.

On reaching the exchanger, clean it with compressed air or low-pressure steam taking care not to damage the fins.

Before the start of every summer season, check the efficiency of condensate drainage.

Adequate periodic maintenance will ensure save both energy and cost savings.

» MAFO - standard air intake

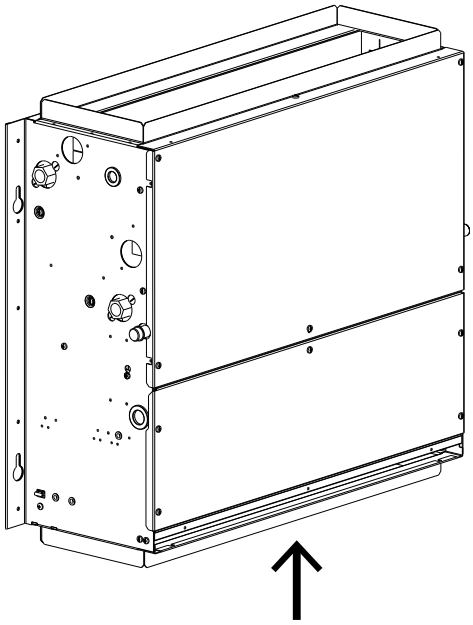

» Air intake MAF90-MAFO90

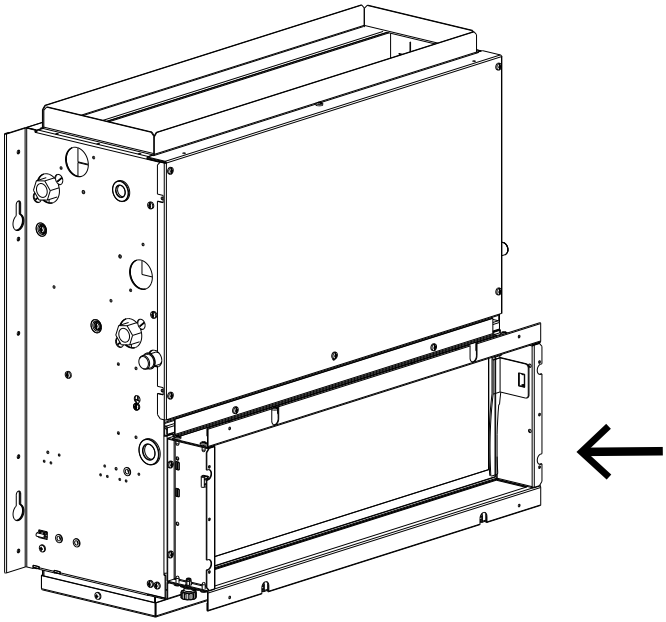

via Romagnoli 12/a
40010 Bentivoglio (BO) - Italy
Ph. +39 051/8908111
- Fax +039 051/8908122

www.galletti.com